L&L Fabrication

HVAC Sheet Metal Products

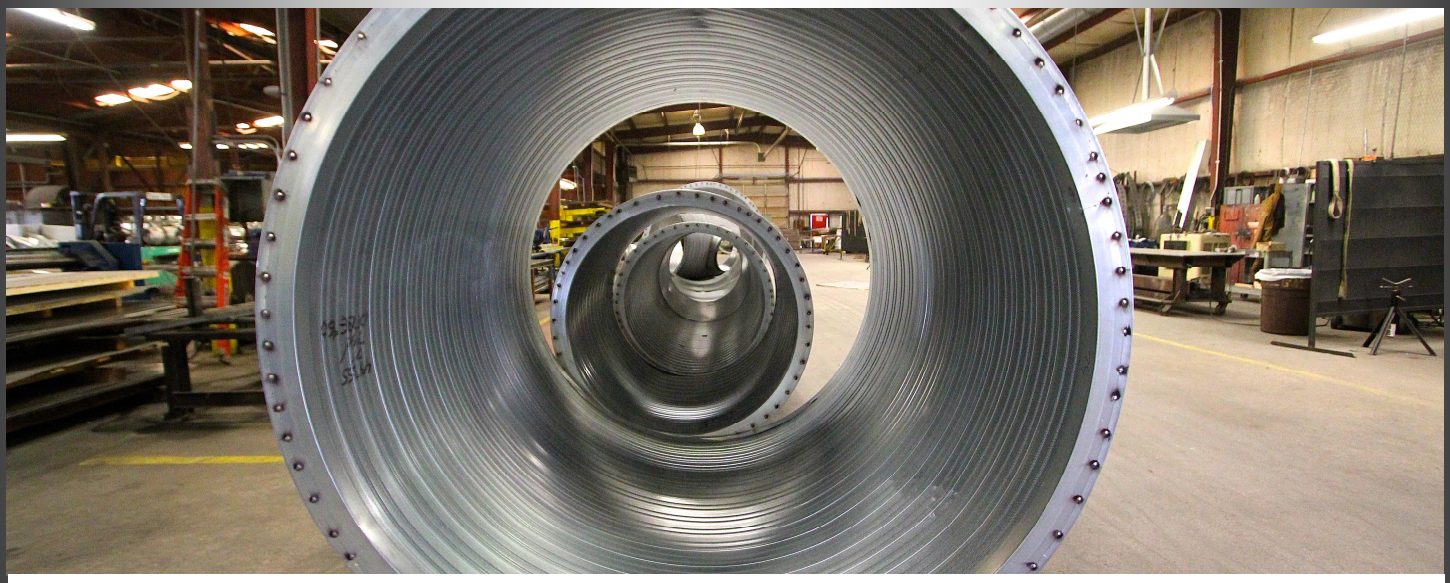

L&L Fabrication manufactures a complete line of spiral duct & fittings. L&L Fabrication has the facilities and expertise to become your prime source for your commercial duct and industrial duct fabrication. We supply standard duct products and cover all of your custom duct fabrication needs. Our duct fabrication ranges from small duct sizes for commercial applications to very large heavy gauge industrial projects.

Have a special, custom, or fast paced project?
Call us today!

PH: 817-834-7146 / FAX: 817-834-2971
For Fast Quotes Email: spiral@landlfab.com

L&L Fabrication stems from over 50 years of pride and tradition. L&L Fabrication manufactures a complete line of high velocity **SPIRAL PIPE/DUCT AND FITTINGS**. Our manufacturing processes are done with state of the art sheet metal equipment - coil line, spiral duct machinery, DNC plasma cutters and CAD stations. We have over 70,000 square feet of plant space, which fabricates over 9,000,000 pounds of sheet metal products per year. Our products are marketed by Manufacturers Representatives throughout the country. As part of our ongoing training programs, we provide factory training, plant tours, product testing and complete comprehensive literature for our representatives, engineers and contractors.
In conjunction with our Reps, L&L Fabrication teams with design engineers and other construction trades to assure a most efficient and cost effective project.

We build high quality round and oval spiral duct and fittings to S.M.A.C.N.A. Standards. Our standard material for construction for both ducts and fittings is G-90 galvanized, which exceeds S.M.A.C.N.A. standards.

Duct/pipe manufacturing capabilities:

- Supply and return spiral duct
- Single wall, double wall, round, oval
- Conveying systems
- Dust Control/Blow pipe
- Underground
- Process Exhaust Systems
- Laboratory Exhaust Systems
- Clean Room Duct Systems
- Full line of fittings
- All materials: G-90, Stainless Steel, PVC Coated, Aluminum, Paint Grip, Black Iron
- Connector angle rings - solid welded, tack welded, Van Stone
- Manifolding of fittings to duct
- Custom and special construction

L&L Fabrication strives to exceed customer expectations in our customer service and the quality of our products. Our customers say we are the easiest company to do business with in the sheet metal industry.

Check us out at www.landlfab.com

L&L FABRICATION - P.O. BOX 14439 - 5936 EDEN DR - FORT WORTH, TX 76117
(817)834-7146 *Voice* - **(817)834-2971** *Fax* - **spiral@landlfab.com**

Why Use L&L Fabrication?

G-90 Galvanized
- Superior corrosion resistance = Longer duct life

Heavier gauge metal
- Longer life
- Less shipping and handling damage
- Less seam failure - higher bursting pressure

Extensive standard product line
- Round long seam up to 120", spiral up to 84”
- Oval
- Insulated, double wall, 1”, 2”, 4” thick insulation
- All Materials
- Fittings
- Plenum Panels
- Transitions
- Duct Sealant
- PVC duct with 4-mil coating inside and 4 mil coating outside
- Stainless Steel full weld construction

Special Construction
- 1/4” - 3/16” thick steel
- All Heliarc (TIG) Welded
- 120"+ Pipe/duct/fittings
- Stainless steel all grades, 4 mil thick PVC coated, Paint-grip, Black Iron

Applications
- Supply duct
- Return duct
- Conveying systems
- Dust control, blow pipe
- Underground
- Exhaust stack
- Laboratory exhaust systems
- Clean room systems
- Noise control panels

Union Yellow Labeled Product

***SPECIAL MANIFOLD ASSEMBLIES

IF YOU NEED IT - WE WILL BUILD IT

Manufactured from galvanized steel, lockforming quality meeting ASTM 924.
All products fabricated at building and construction wage rates with S.M.W.I.A. Yellow Labels

L&L FABRICATION - P.O. BOX 14439 - 5936 EDEN DR - FORT WORTH, TX 76117
(817)834-7146 *Voice* - **(817)834-2971** *Fax* - **spiral@landlfab.com**

SPIRAL PIPE STANDARDS

L&L Fabrication HVAC Metal Products

STANDARD GAUGE AND CONSTRUCTION FOR +10" W.G. APPLICATIONS

PIPE DIA	GAUGE OF METAL		CONSTRUCTION		DUCT/DUCT CONNECTION	DUCT/DUCT CONNECTION
	SPIRAL PIPE	FITTINGS	SPIRAL PIPE	FITTINGS		
3-14"	26	24	SPIRAL LOCKSEAM	LAP/SPOT SEAL	4 " COUPLING	2" SLIP-FIT COLLAR
16-26"	24	22	SPIRAL LOCKSEAM	LAP/SPOT SEAL	4 " COUPLING	2" SLIP-FIT COLLAR
28-36"	22	20	SPIRAL LOCKSEAM	LAP/SPOT SEAL	4 " COUPLING	2" SLIP-FIT COLLAR
38-50"	20	20				
52-60"	18	18	SPIRAL LOCKSEAM	LAP/SPOT SEAL	4 " COUPLING	2" SLIP-FIT COLLAR
61"-78	16	16	SPIRAL LOCKSEAM	LAP/SPOT SEAL	ANGLE RING/ FLANGE RECOMMENDED	ANGLE RING/ FLANGE RECOMMENDED
80" & up	16	16	LONGITUDINAL SEAM	LAP/SPOT SEAL	ANGLE RING/ FLANGE RECOMMENDED	ANGLE RING/ FLANGE RECOMMENDED

(Diameters, which are not offered as Spiral Product, are available as Longitudinal Welded Seam Product)
*Contact factory for information on spiral duct over 60" round.

Notes:

Round spiral pipe and fittings are available in the following diameters:

A. 3"-10"Diameter in 1" Diameter Increments

B. 12"-74"Diameter in 2" Diameter Increments

2. Standard lengths of Spiral Pipe are 10' and 20' lengths

3. Standard lengths of Longitudinal Seam Pipe are 4' and 5' lengths

Spiral Pipe is available in Galvanized, Black Iron, Stainless Steel, Paint Grip, Aluminum, and PVC Coated Materials

Pressed and Stitch Welded Elbows available:

3" To 12"Diameter - 90°

3" To 12"Diameter - 45°

Gored Elbows:

Up to 36° - 2 Gore – Lap/Tack & Seal

37° - 72° - 3 Gore – Lap/Tack & Seal

73° - 90° - 5 Gore – Lap/Tack & Seal

L&L FABRICATION - P.O. BOX 14439 - 5936 EDEN DR - FORT WORTH, TX 76117
(817)834-7146 *Voice* - **(817)834-2971** *Fax* - **spiral@landlfab.com**

SPIRAL PIPE
ROUND SINGLE WALL

L&L Fabrication HVAC Metal Products

ROUND PIPE GAUGE SCHEDULE

3” - 24” diameter	26ga. Spiral Lockseam
26” - 42” diameter	24ga. Spiral Lockseam
44” - 66” diameter	22ga. Spiral Lockseam
68” - 96” diameter	20ga. Spiral Lockseam
98” & up diameter	16ga. Longitudinal Seam

ROUND FITTINGS GAUGE SCHEDULE

3” - 24” diameter	24 Gauge
26” - 42” diameter	22 Gauge
44” - 60” diameter	20 Gauge
62” - 96” diameter	18 Gauge
98” and larger	16 Gauge

COUPLINGS

Pipe-to-pipe joints to 60” diameter are sleeve coupling.
Pipe-to-fitting joints to 60” diameter are slip fit; collar of fitting projecting into pipe.
Pipe-to-pipe and pipe-to-fitting connections 61” and larger, angle ring flanges are recommended.

LONGITUDINAL SEAM PIPE

3” - 24” diameter	24 Gauge
26” - 42” diameter	22 Gauge
44” - 60” diameter	20 Gauge
62” - 96” diameter	18 Gauge
98” and larger	16 Gauge

ROUND PIPE GAUGE SCHEDULE

A	-	Inlet Size
B	-	Outlet Size
C	-	Branch Size
D	-	Branch Size
L	-	Body Length
R	-	Center Line Radius of 1.5xA
S	-	2”
Y	-	2”
T	-	1”
X	-	A-B with 4” minimum length

ELBOW CONSTRUCTION

Elbow Angle	*Number of Gores*
Up to 36°	2
37° - 72°	3
73° - 90°	5

2-PIECE MITERED ELBOW VANE SCHEDULE

Diameter	*Number of Vanes*
3” - 9”	2
10” - 13”	3
14” - 19”	4
20” - 57”	5
Over 58”	12” spacing

Manufactured from galvanized steel, lockforming quality meeting ASTM 924.
All products fabricated at building and construction wage rates with S.M.W.I.A. Yellow Labels

L&L FABRICATION - P.O. BOX 14439 - 5936 EDEN DR - FORT WORTH, TX 76117
(817)834-7146 *Voice* - **(817)834-2971** *Fax* - **spiral@landlfab.com**

ELBOWS

90° DIE STAMPED ELBOW **SE-90**

3” DIAMETER THROUGH 12”

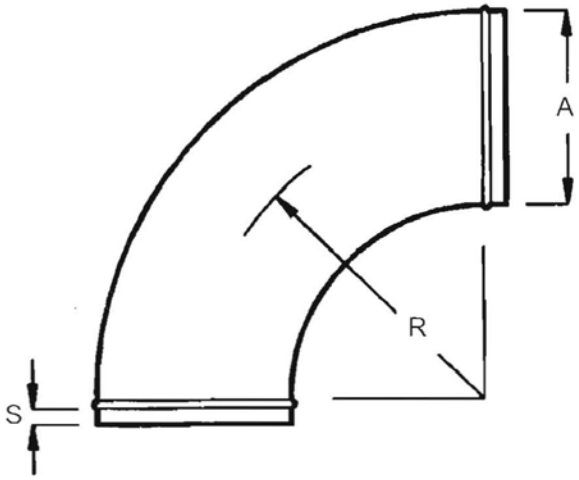

45° DIE STAMPED ELBOW **SE-45**

3” DIAMETER THROUGH 12”

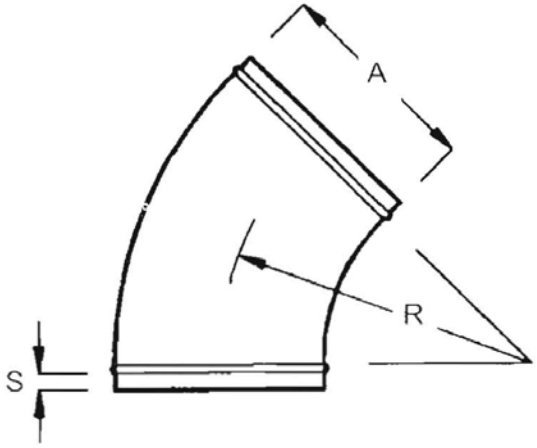

90° 5-PIECE ELBOW **E5-90**

13” DIAMETER and LARGER

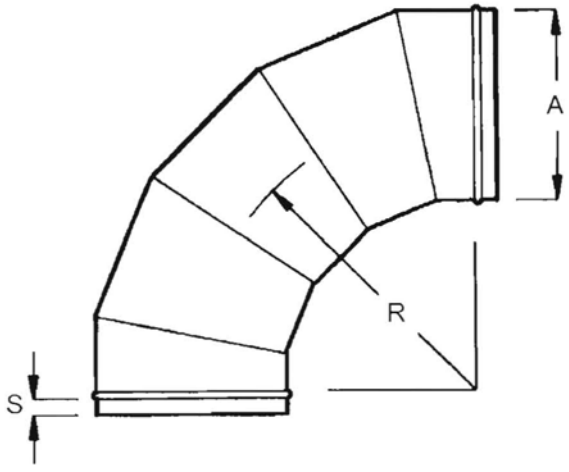

45° 3-PIECE ELBOW **E3-45**

13” DIAMETER and LARGER

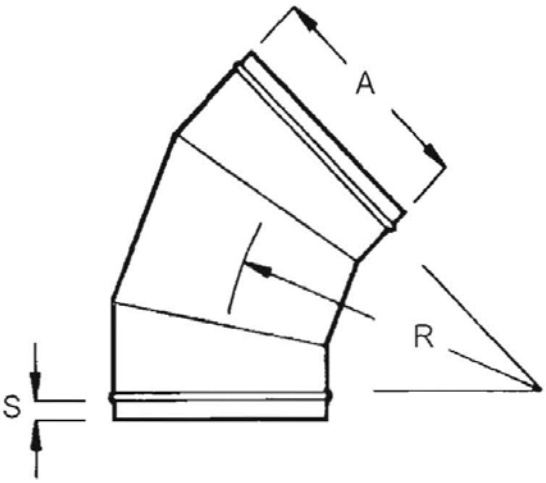

L&L FABRICATION - P.O. BOX 14439 - 5936 EDEN DR - FORT WORTH, TX 76117
(817)834-7146 *Voice* - **(817)834-2971** *Fax* - **spiral@landlfab.com**

ELBOWS

60° 3-PIECE ELBOW **E3-60**

3” DIAMETER and LARGER

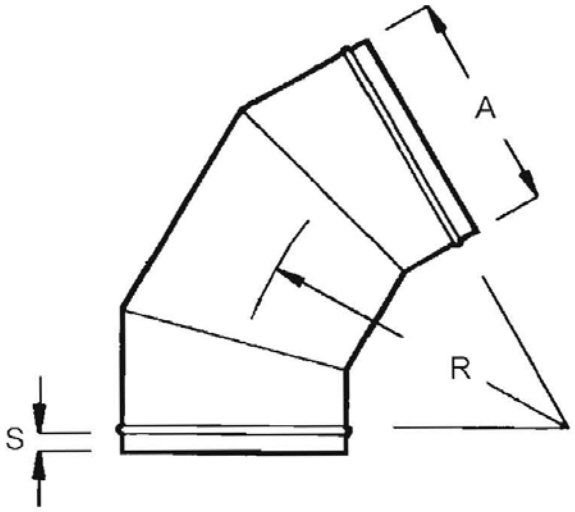

30° 2-PIECE ELBOW **E2-30**

3” DIAMETER and LARGER

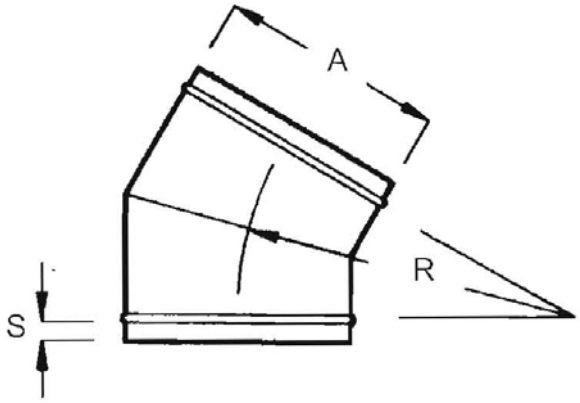

22.5° 2-PIECE ELBOW **E2-221/2**

3” DIAMETER and LARGER

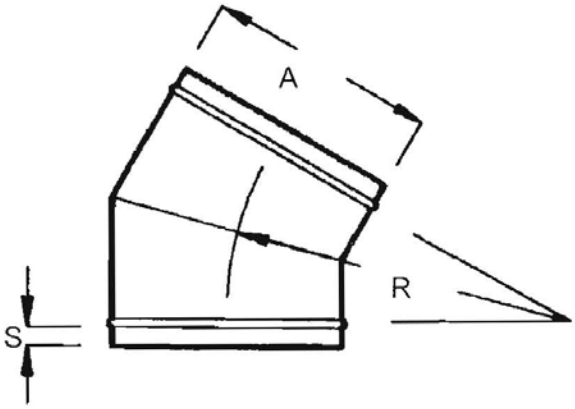

90° 2-PIECE ELBOW **EV2-90**
3” DIAMETER and LARGER
(NO VANES) **E2-90**

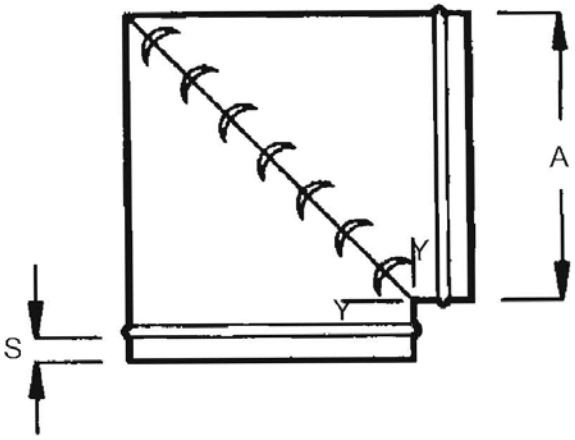

L&L FABRICATION - P.O. BOX 14439 - 5936 EDEN DR - FORT WORTH, TX 76117
(817)834-7146 *Voice* - **(817)834-2971** *Fax* - **spiral@landlfab.com**

ELBOWS

90° 3-PIECE ELBOW **THE 3-90**
WITH STRAIGHT LATERAL

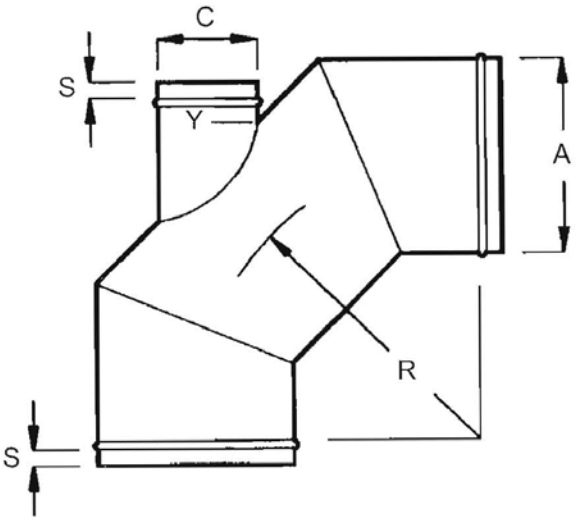

12° 2-PIECE ELBOW **HTE 2-45**
WITH STRAIGHT LATERAL

$$L = \frac{C \times 1.414}{2} + Y$$

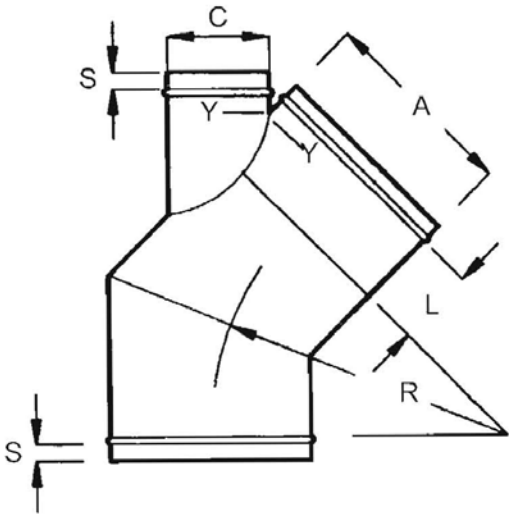

L&L FABRICATION - P.O. BOX 14439 - 5936 EDEN DR - FORT WORTH, TX 76117
(817)834-7146 *Voice* - **(817)834-2971** *Fax* - **spiral@landlfab.com**

STRAIGHT TEES

TEE **T1**

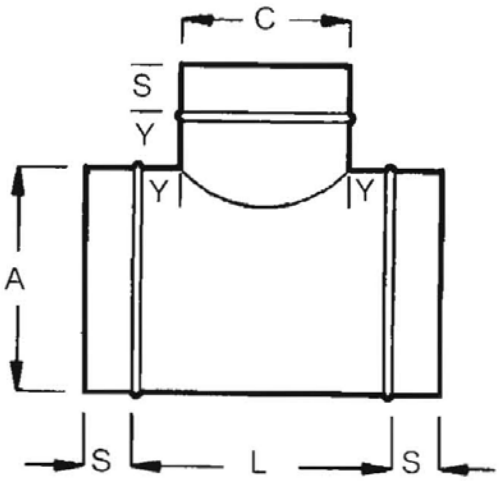

REDUCING TEE **T1R**

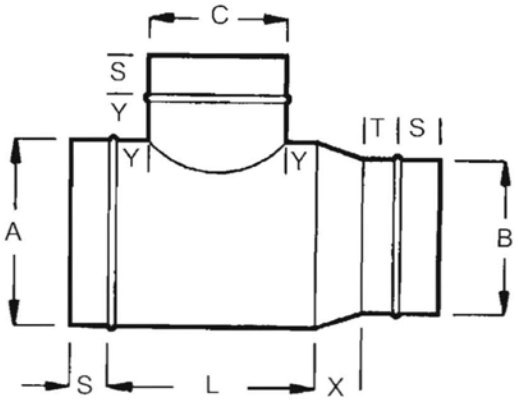

180° CROSS **T2**

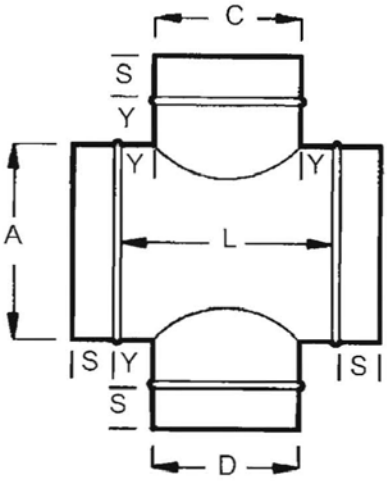

180° REDUCING CROSS **T2R**

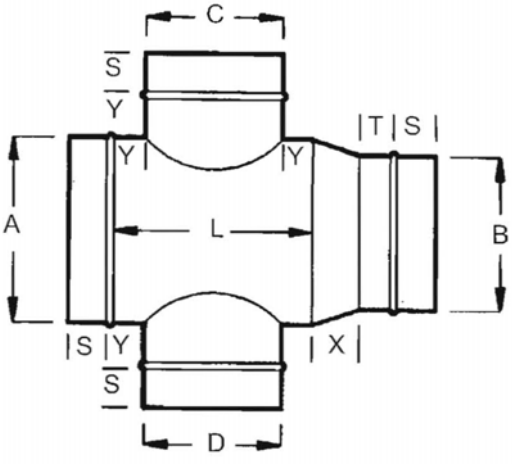

L&L FABRICATION - P.O. BOX 14439 - 5936 EDEN DR - FORT WORTH, TX 76117
(817)834-7146 *Voice* - **(817)834-2971** *Fax* - **spiral@landlfab.com**

CONICAL TEES

Fabrication
HVAC Metal Products

CONICAL TEE **CT1**

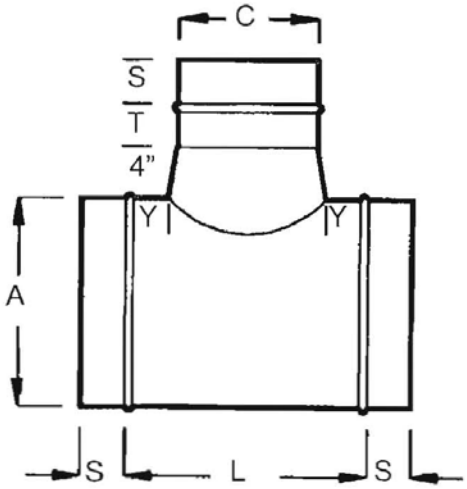

REDUCING CONICAL TEE **CT1R**

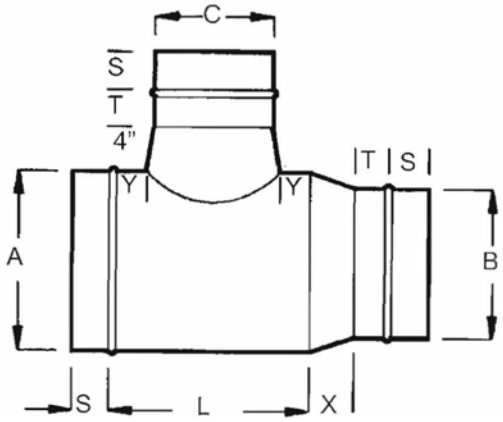

180° CONICAL CROSS **CT2**

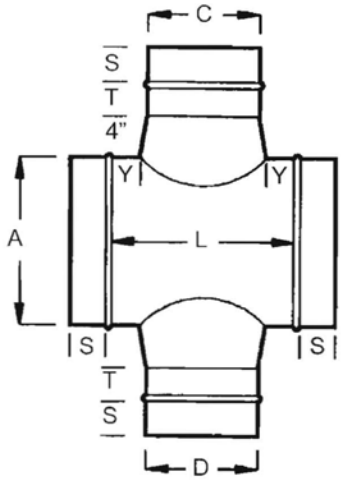

180° REDUCING CONICAL CROSS **CT2R**

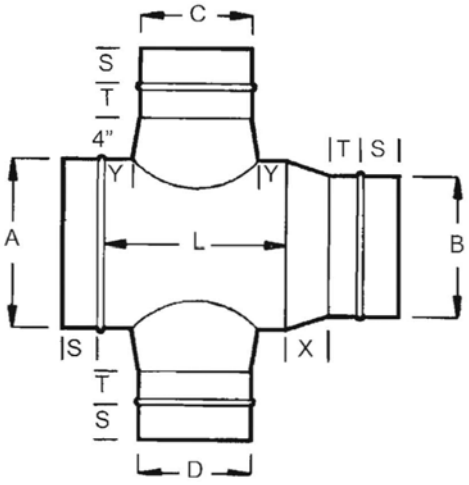

L&L FABRICATION - P.O. BOX 14439 - 5936 EDEN DR - FORT WORTH, TX 76117
(817)834-7146 *Voice* - **(817)834-2971** *Fax* - **spiral@landlfab.com**

HIGH EFFICIENCY TEES

Fabrication
HVAC Metal Products

HIGH EFFICIENCY TEE **CT1**

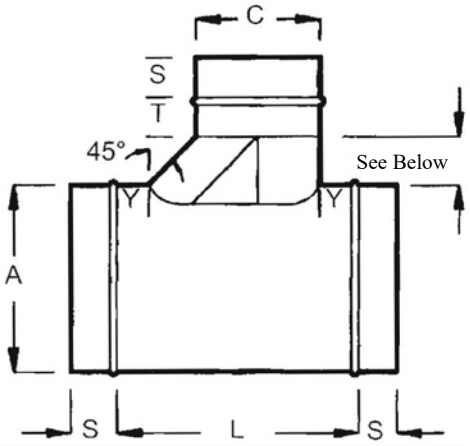

3" THROUGH 16" DIA TAP = 6" LONG

17" AND LARGER DIA TAP = 12" LONG

REDUCING HIGH EFFICIENCY TEE **HT1R**

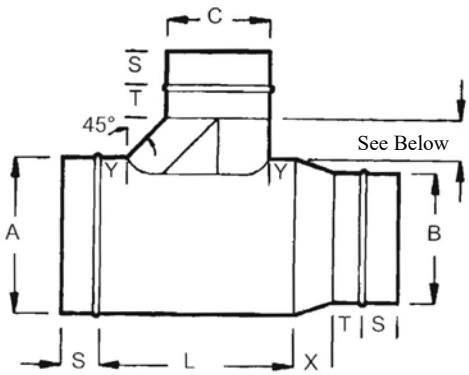

3" THROUGH 16" DIA TAP = 6" LONG

17" AND LARGER DIA TAP = 12" LONG

180° HIGH EFFICIENCY CROSS **HT2**

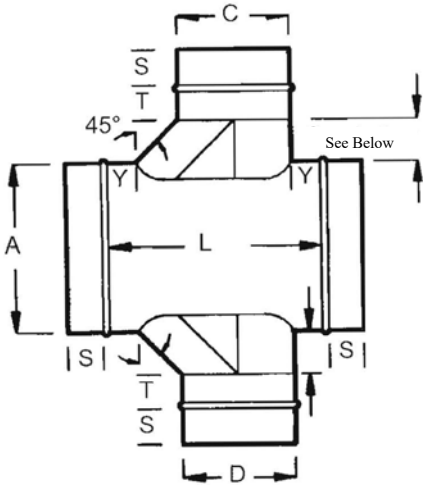

3" THROUGH 16" DIA TAP = 6" LONG

17" AND LARGER DIA TAP = 12" LONG

180° REDUCING HIGH EFFICIENCY CROSS **HT2R**

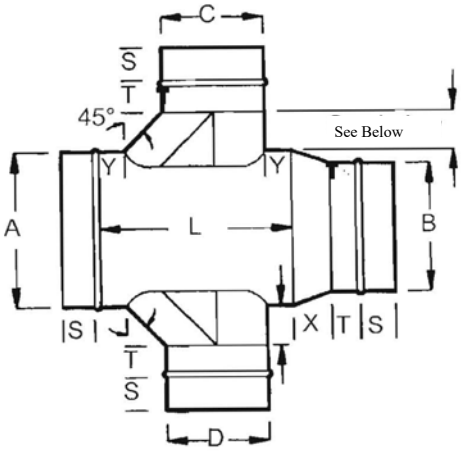

3" THROUGH 16" DIA TAP = 6" LONG

17" AND LARGER DIA TAP = 12" LONG

STRAIGHT LATERALS

Fabrication
HVAC Metal Products

LATERAL **L1**

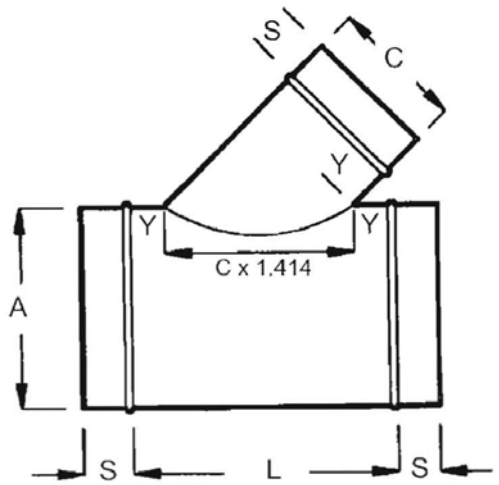

REDUCING LATERAL **L1R**

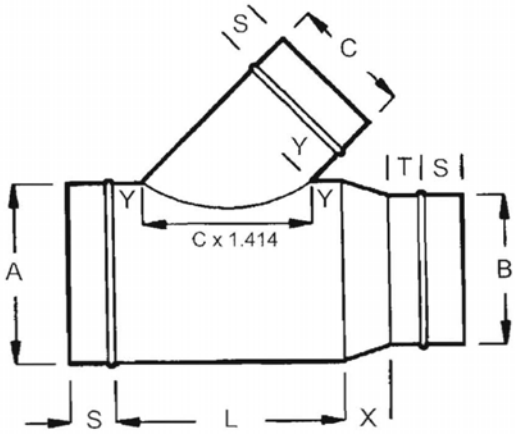

180° LATERAL CROSS **L2**

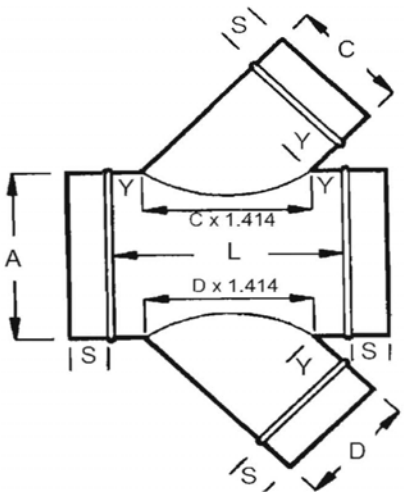

180° REDUCING LATERAL CROSS **L2R**

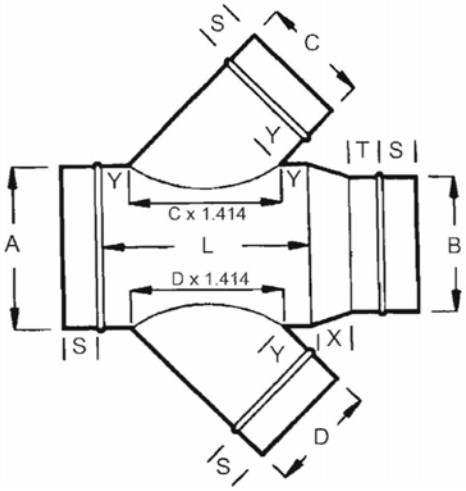

L&L FABRICATION - P.O. BOX 14439 - 5936 EDEN DR - FORT WORTH, TX 76117
(817)834-7146 *Voice* - (817)834-2971 *Fax* - spiral@landlfab.com

CONICAL LATERALS

Fabrication
HVAC Metal Products

CONICAL LATERAL **CL1**

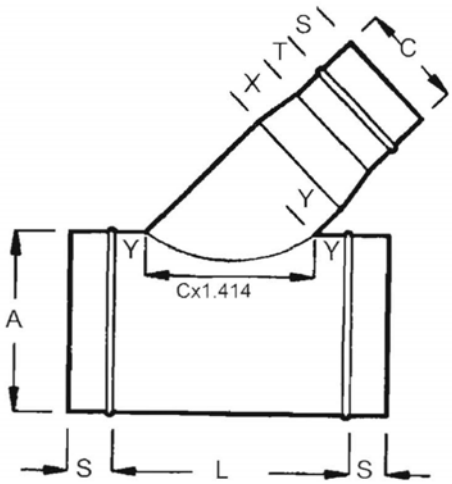

REDUCING CONICAL LATERAL **CL1R**

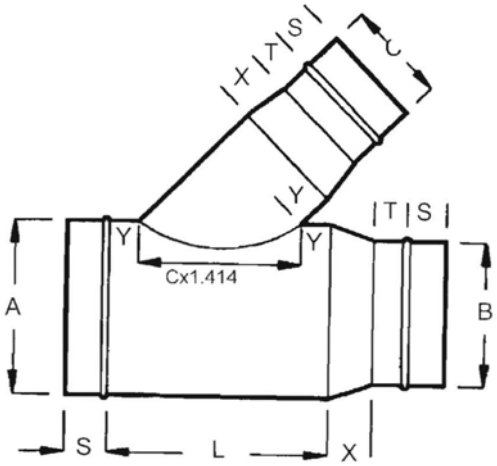

180° CONICAL LATERAL CROSS **CL2**

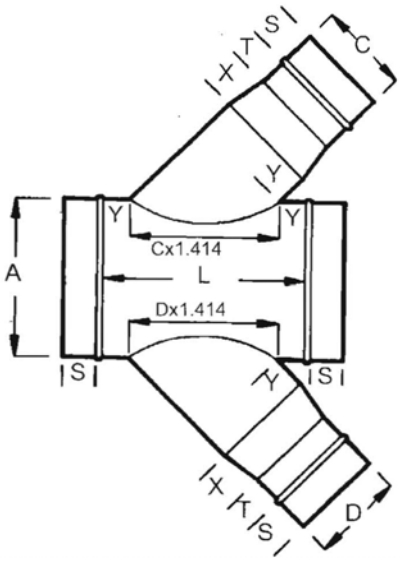

180° REDUCING CONICAL LATERAL CROSS **CL2R**

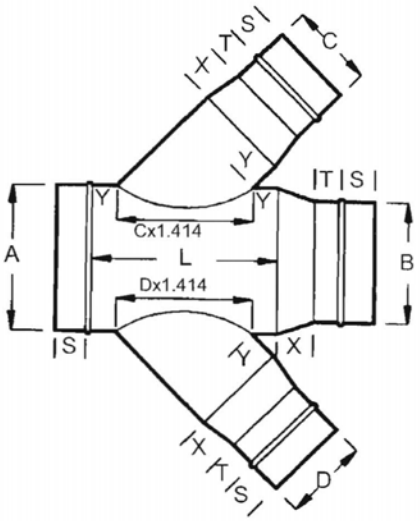

MISCELLANEOUS

L&L Fabrication HVAC Metal Products

OFFSET **OS**

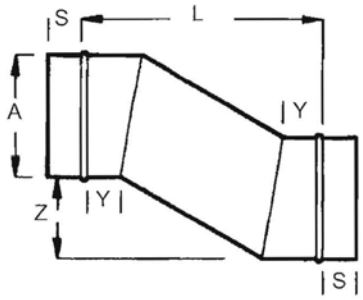

BELL MOUTH (STANDARD RADIUS) **BM**
(SHORT RADIUS) **BMS**

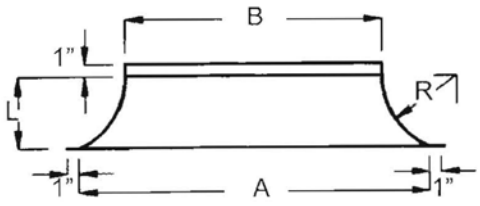

Dimensions are approximate. Consult factory for exact dimensions.

Y BRANCH **Y2**

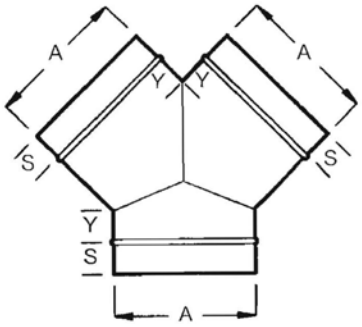

REDUCING Y BRANCH **Y2R**

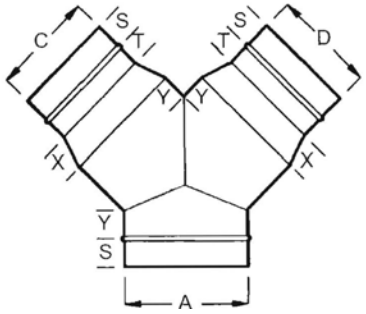

BULL HEAD TEE **BT**
(WITH 1 HEEL VANE) **BTV**

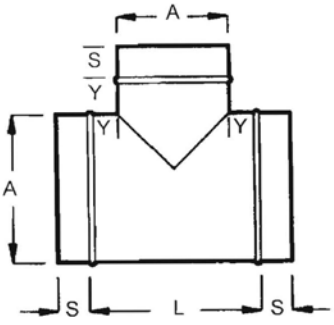

REDUCING BULL HEAD TEE **BTR**
(WITH 1 HEEL VANE) **BTRV**

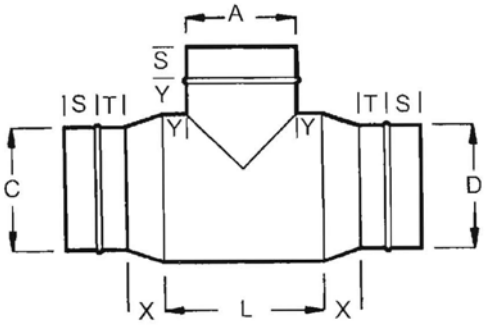

MISCELLANEOUS

L&L Fabrication HVAC Metal Products

SPUN REDUCER **SR1**
CONCENTRIC REDUCER **R1**

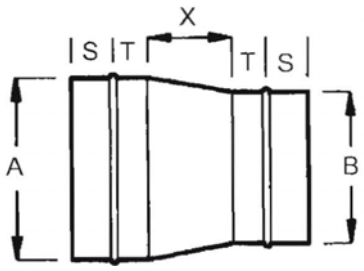

ECCENTRIC REDUCER **ER1**

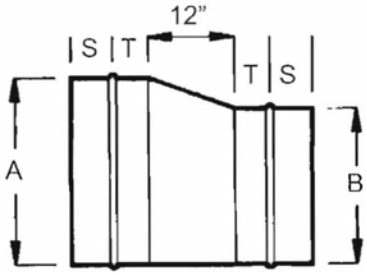

12" MINIMUM LENGTH

END PLUG DUCT **DEP**

END CAP FITTING **FEC**

SQUARE TO ROUND **SQR**

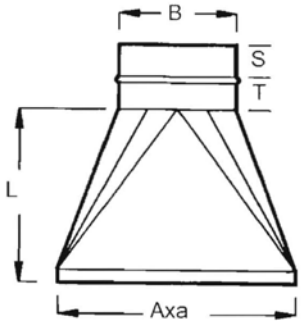

DUCT COUPLING **DC**

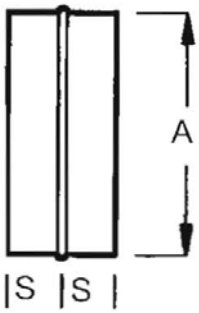

FITTING COUPLING **FC**

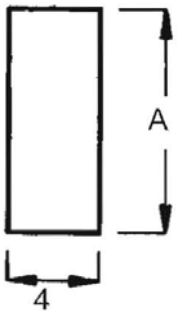

LATERAL TAPS

LATERAL SADDLE TAP (STRAIGHT BODIED) **LSP**

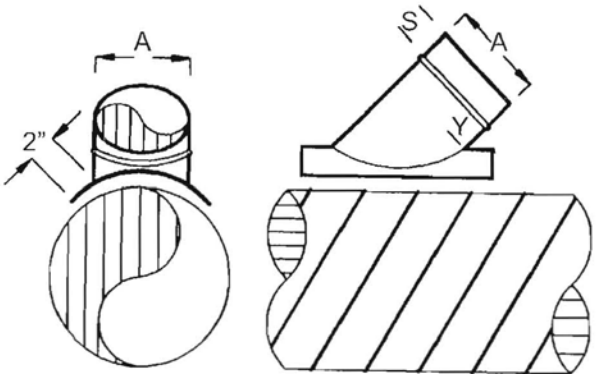

LATERAL CONTOURED TAP (STRAIGHT) **LP**

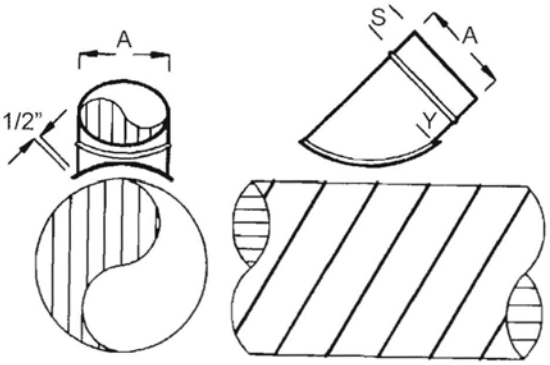

SADDLE TAP (HIGH EFFICIENCY BODIED) **HTSP**

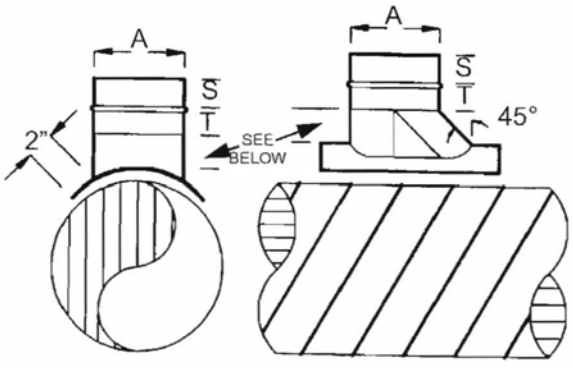

3" THROUGH 16" DIA TAP = 6" LONG

17" AND LARGER DIA TAP = 12" LONG

CONTOURED TAP (HIGH EFFICIENCY) **HTSP**

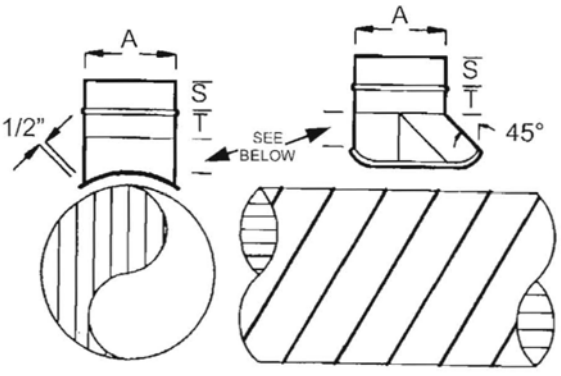

3" THROUGH 16" DIA TAP = 6" LONG

17" AND LARGER DIA TAP = 12" LONG

L&L FABRICATION - P.O. BOX 14439 - 5936 EDEN DR - FORT WORTH, TX 76117
(817)834-7146 *Voice* - **(817)834-2971** *Fax* - **spiral@landlfab.com**

TEE TAPS

Fabrication
HVAC Metal Products

SADDLE TAP (CONICAL BODIED) **TCSP**

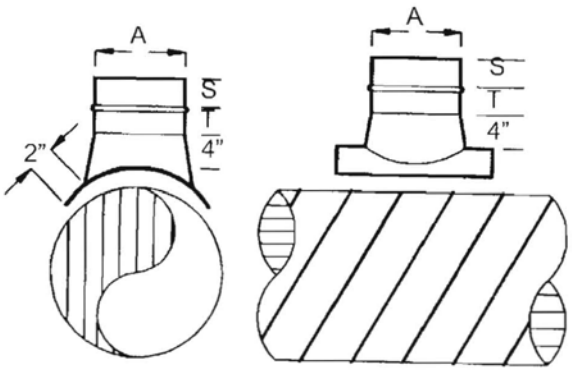

CONTOURED TAP (CONICAL) **TCP**

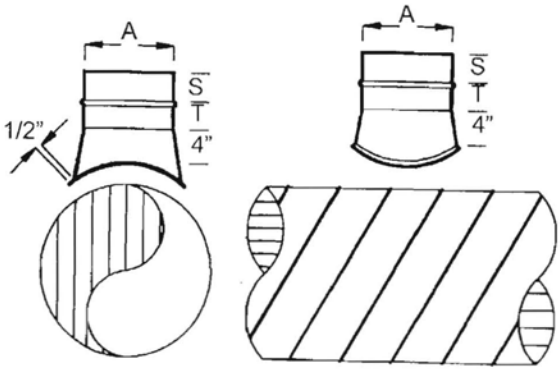

SADDLE TEE TAP (STRAIGHT BODIED) **TSP**

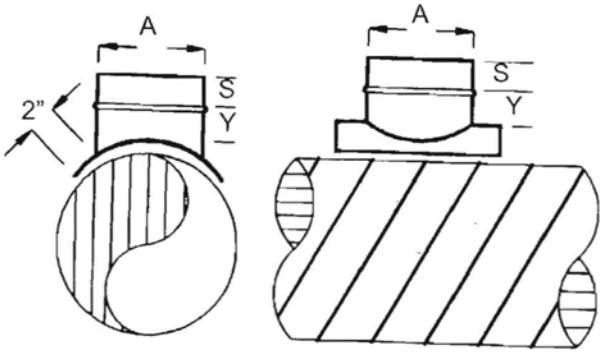

CONTOURED TAP (STRAIGHT) **TP**

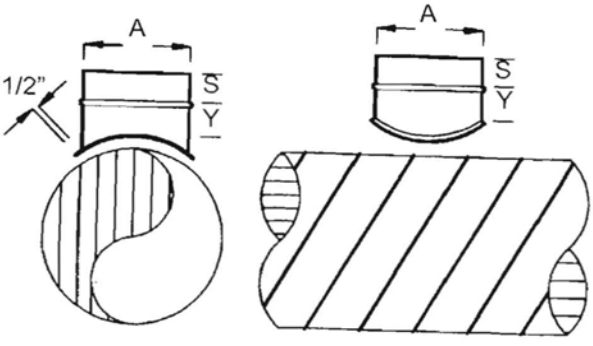

L&L FABRICATION - P.O. BOX 14439 - 5936 EDEN DR - FORT WORTH, TX 76117
(817)834-7146 *Voice* - **(817)834-2971** *Fax* - **spiral@landlfab.com**

LATERAL TAPS

LATERAL SADDLE TAP (CONICAL BODIED) **TCSP**

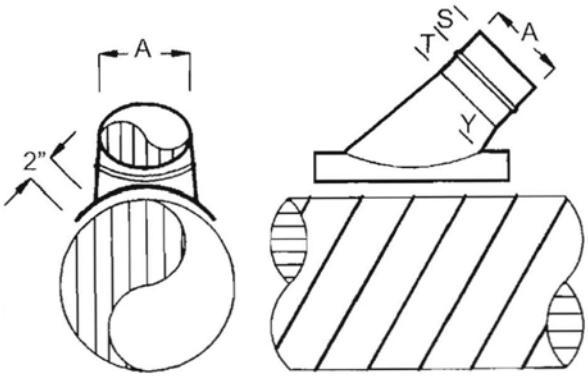

LATERAL CONTOURED TAP (CONICAL) **LCP**

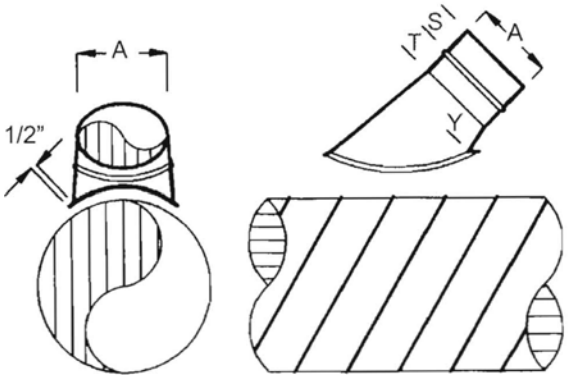

L&L FABRICATION - P.O. BOX 14439 - 5936 EDEN DR - FORT WORTH, TX 76117
(817)834-7146 *Voice* - **(817)834-2971** *Fax* - **spiral@landlfab.com**

CONNECTORS

L&L Fabrication
HVAC Metal Products

DUCT CONNECTOR
VAN STONE ANGLE RING ON 1 END

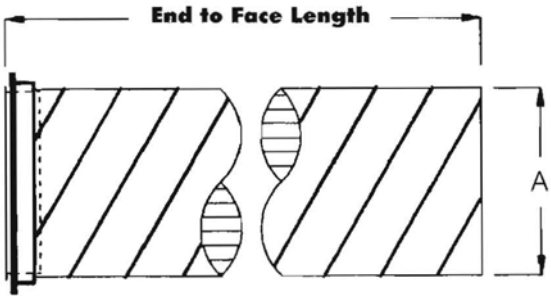

DUCT CONNECTOR
VAN STONE ANGLE RING ON BOTH ENDS

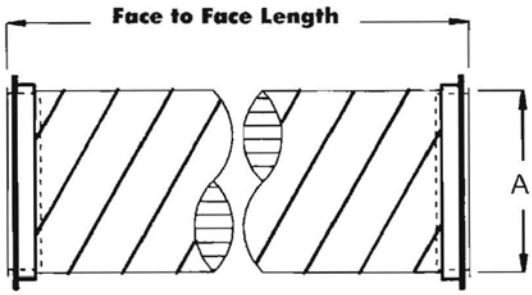

DUCT CONNECTOR
ANGLE RING ON 1 END
SOLID WELDED OR TACK WELDED

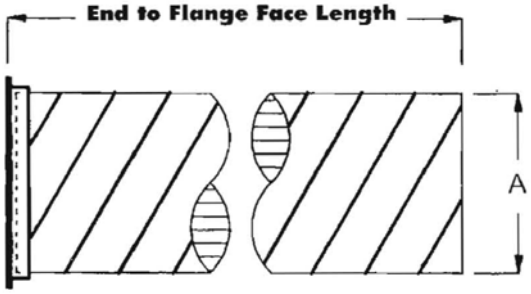

DUCT CONNECTOR
ANGLE RING ON BOTH ENDS
SOLID WELDED OR TACK WELDED

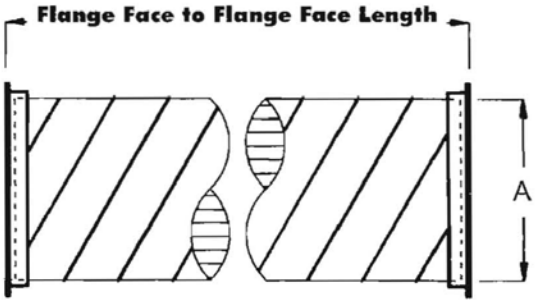

FITTING CONNECTOR
ANGLE RING ON FITTING END
SOLID WELDED OR TACK WELDED

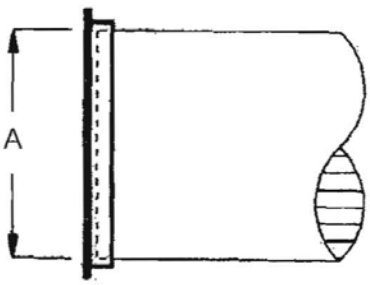

FITTING CONNECTOR
VAN STONE ANGLE RING ON FITTING END

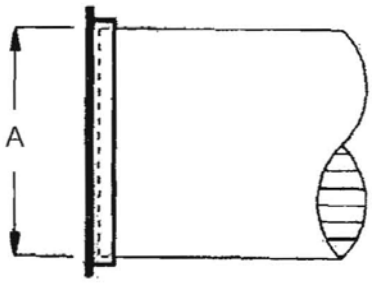

SPIRAL PIPE
ROUND DOUBLE WALL

L&L Fabrication HVAC Metal Products

ROUND PIPE GAUGE SCHEDULE

5" - 26" diameter	26ga. Spiral Lockseam
28" - 42" diameter	24ga. Spiral Lockseam
44" - 66" diameter	22ga. Spiral Lockseam
38" - 50" diameter	20ga. Spiral Lockseam
68" - 96" diameter	18ga. Spiral Lockseam
98" & up diameter	16ga. Longitudinal Seam

ROUND FITTINGS GAUGE SCHEDULE

3" - 24" diameter	24 Gauge
26" - 42" diameter	22 Gauge
44" - 66" diameter	20 Gauge
68" - 96" diameter	18 Gauge
98" and larger	16 Gauge

Outer Press Shell: (O.D.)

3" - 34" diameter	24ga. Solid
35" - 58" diameter	22ga. Solid
60" & up diameter	20ga. Solid

COUPLING

Pipe-to-pipe joints to 58" I.D. diameter are inner & outer male sleeve coupling.

Pip-to-fitting joints to 58" I.D. diameter are inner & outer slip fit; collar of fitting projecting into pipe.

Above 60" I.D. inner male sleeve coupling & outer joined angle ring flanges are recommended.

ROUND PIPE GAUGE SCHEDULE

A	-	Inside diameter of inlet
B	-	Inside diameter of outlet
C	-	Inside diameter of branch size
D	-	Inside diameter of branch size
L	-	Body Length
R	-	Center Line Radius of 1.5xA
S	-	2"
Y	-	2"
T	-	1"
X	-	A-B with 4" minimum length

ELBOW CONSTRUCTION

Elbow Angle	*Number of Gores*
Up to 36°	2
37° - 72°	3
73° - 90°	5

INSULATION (1" thick)

Between the outer pressure shell and the inner liner is 1" thick fiberglass which meets the requirements set forth in NFPA pamphlet #90A (catalogue NFPA #255) as to flame spread and smoke developed ratings. The K-Value of the insulation at 75° M.T. = .260 BTU

Manufactured from galvanized steel, lockforming quality meeting ASTM 924.
All products fabricated at building and construction wage rates with S.M.W.I.A. Yellow Labels

L&L FABRICATION - P.O. BOX 14439 - 5936 EDEN DR - FORT WORTH, TX 76117
(817)834-7146 *Voice* - **(817)834-2971** *Fax* - **spiral@landlfab.com**

DOUBLE WALL ELBOWS

90° DIE STAMPED ELBOW **SE-90**
3" DIAMETER THROUGH 12"

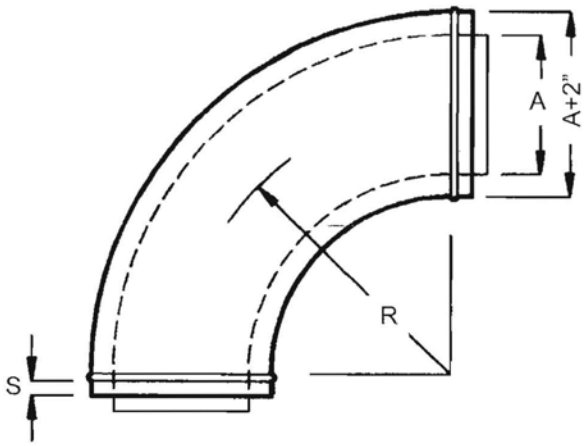

45° DIE STAMPED ELBOW **SE-45**
3" DIAMETER THROUGH 12"

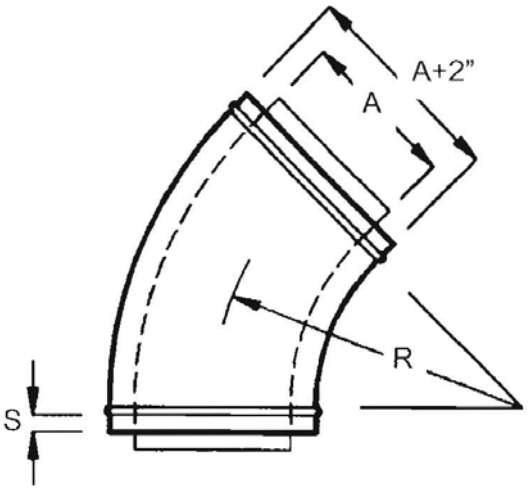

90° 5-PIECE ELBOW **E5-90**
13" DIAMETER and LARGER

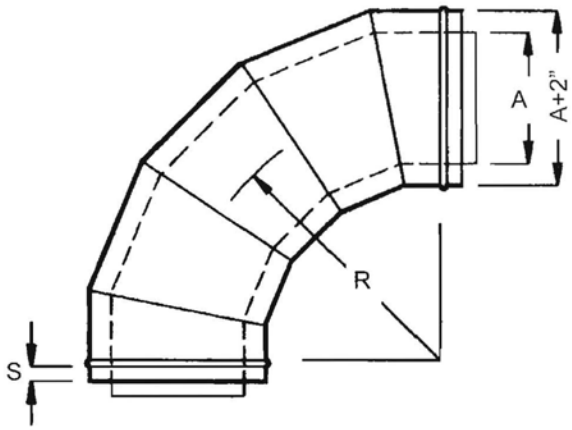

45° 3-PIECE ELBOW **E3-45**
13" DIAMETER and LARGER

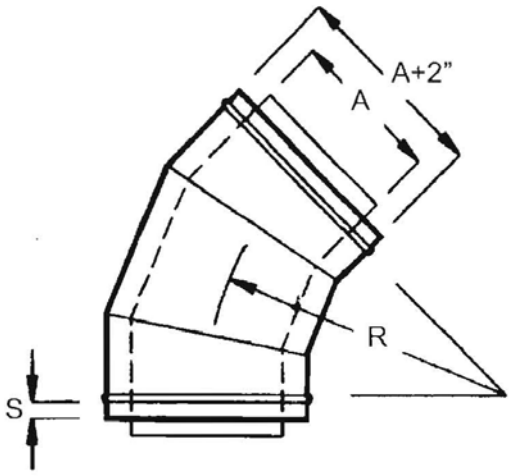

L&L FABRICATION - P.O. BOX 14439 - 5936 EDEN DR - FORT WORTH, TX 76117
(817)834-7146 *Voice* - **(817)834-2971** *Fax* - **spiral@landlfab.com**

DOUBLE WALL ELBOWS

60° 3-PIECE ELBOW **E3-60**
3" DIAMETER and LARGER

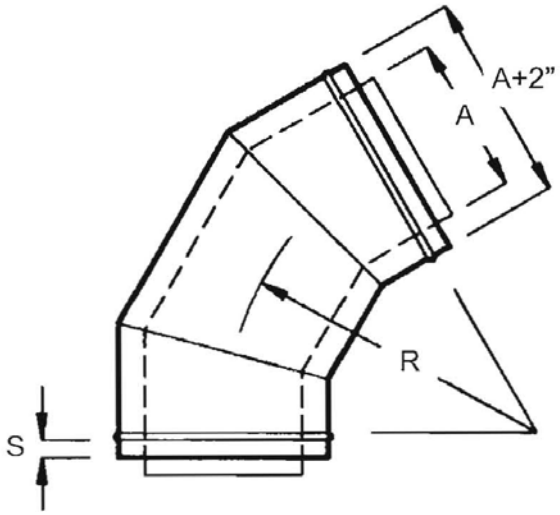

30° 2-PIECE ELBOW **E2-30**
3" DIAMETER and LARGER

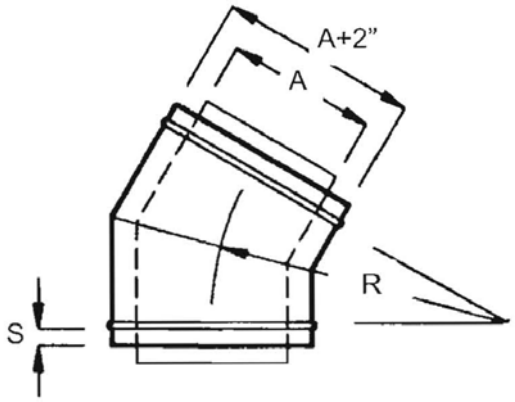

22.5° 2-PIECE ELBOW **E2-221/2**
3" DIAMETER and LARGER

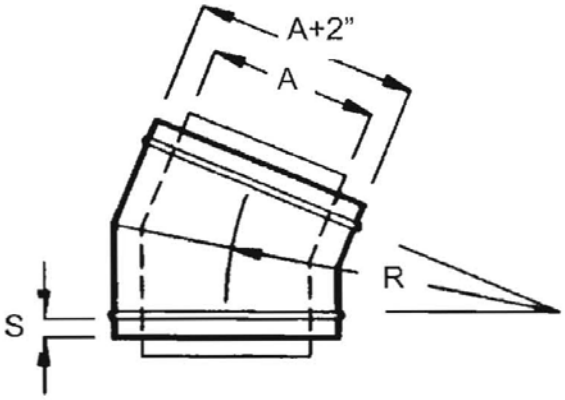

90° 2-PIECE ELBOW **EV2-90**
3" DIAMETER and LARGER
(NO VANES) **E2-90**

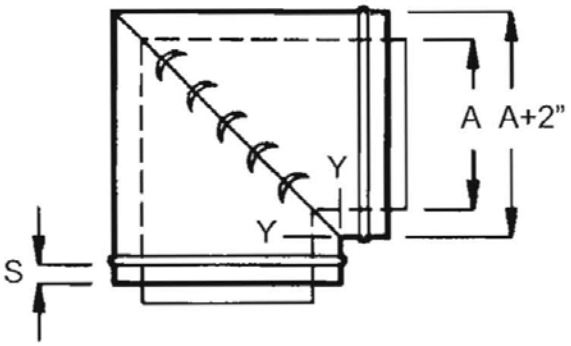

L&L FABRICATION - P.O. BOX 14439 - 5936 EDEN DR - FORT WORTH, TX 76117
(817)834-7146 *Voice* - **(817)834-2971** *Fax* - **spiral@landlfab.com**

DOUBLE WALL ELBOWS

90° 3-PIECE ELBOW **HTE 3-90**
WITH STRAIGHT LATERAL

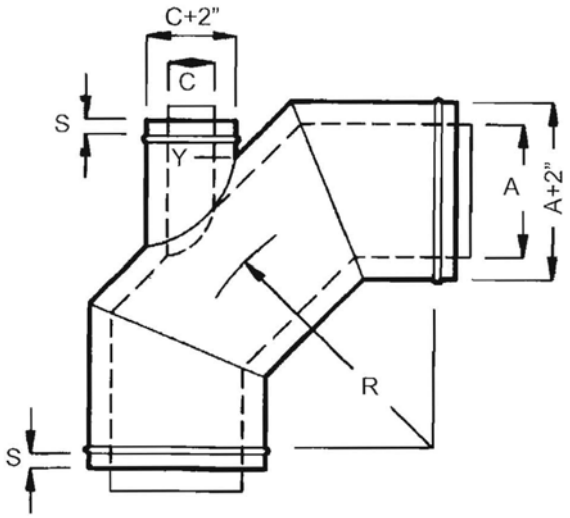

45° 2-PIECE ELBOW **HTE2-45**
WITH STRAIGHT LATERAL

$$L = \frac{C \times 1.414}{2} + Y$$

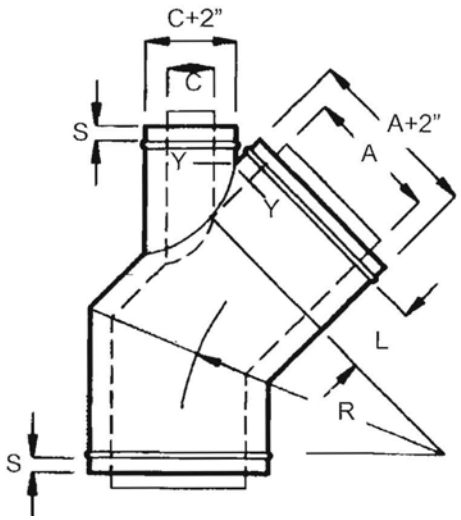

L&L FABRICATION - P.O. BOX 14439 - 5936 EDEN DR - FORT WORTH, TX 76117
(817)834-7146 *Voice* - **(817)834-2971** *Fax* - **spiral@landlfab.com**

STRAIGHT TEES
DOUBLE WALL

Fabrication
HVAC Metal Products

TEE **T1**

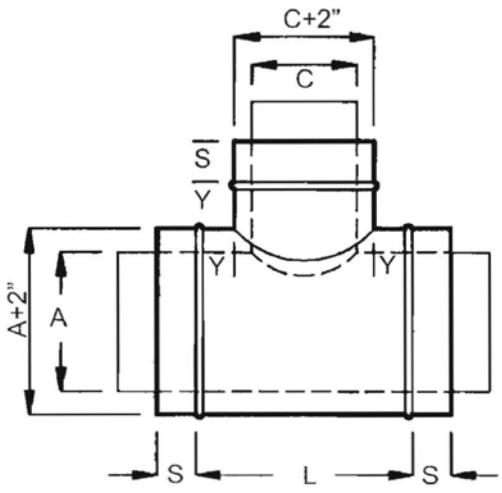

REDUCING TEE **T1R**

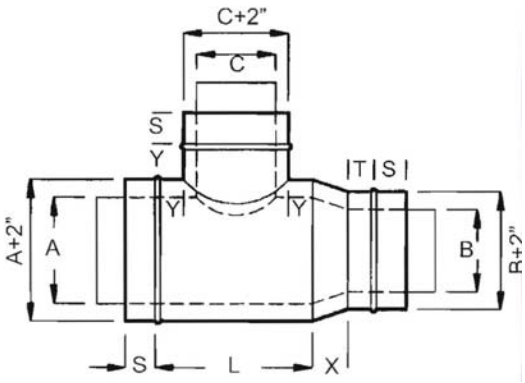

180° CROSS **T2**

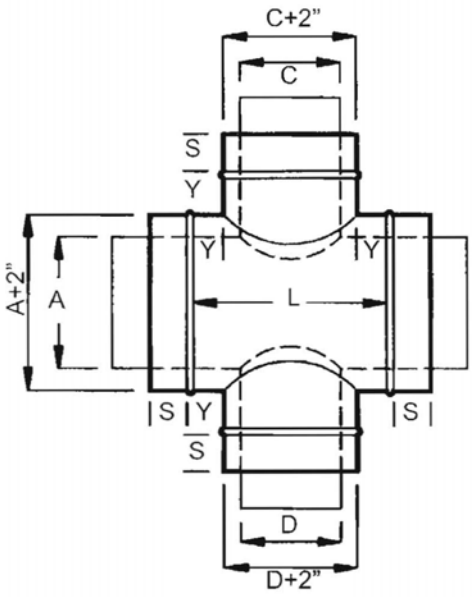

180° REDUCING CROSS **T2R**

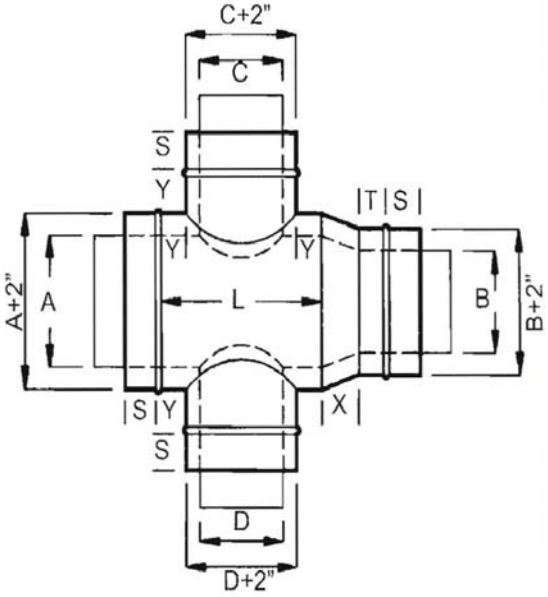

L&L FABRICATION - P.O. BOX 14439 - 5936 EDEN DR - FORT WORTH, TX 76117
(817)834-7146 *Voice* - (817)834-2971 *Fax* - spiral@landlfab.com

CONICAL TEES
DOUBLE WALL

L&L Fabrication
HVAC Metal Products

CONICAL TEE **CT1**

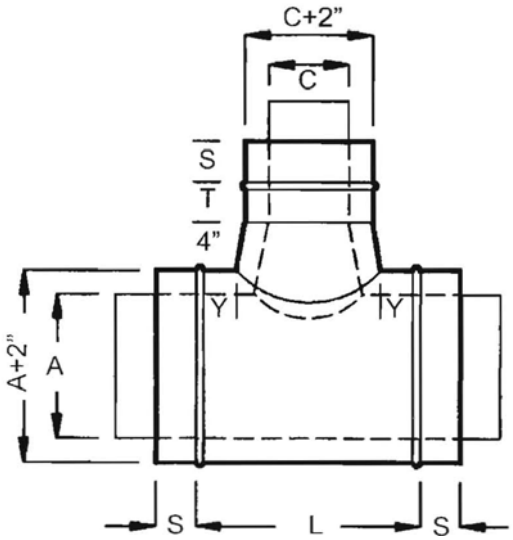

REDUCING CONICAL TEE **CT1R**

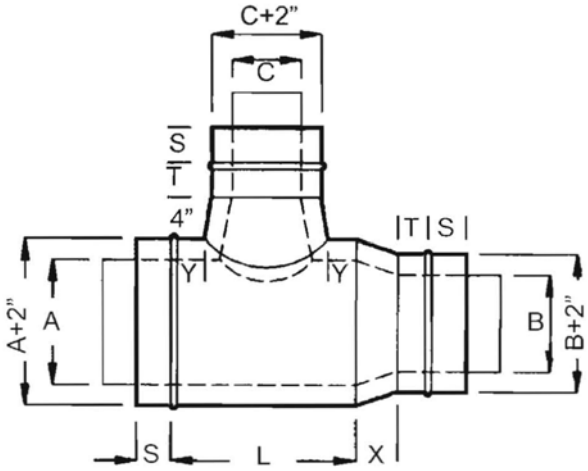

180° CONICAL CROSS **CT2**

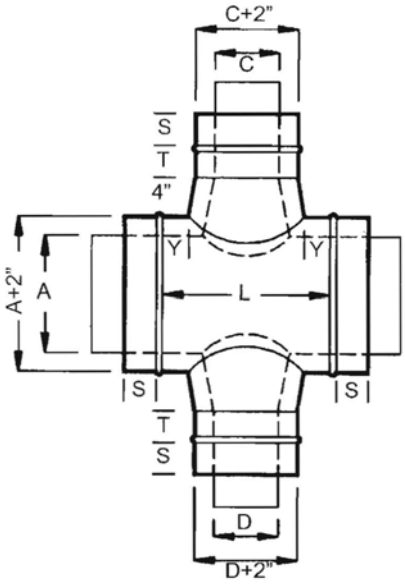

180° REDUCING CONICAL CROSS **CT2R**

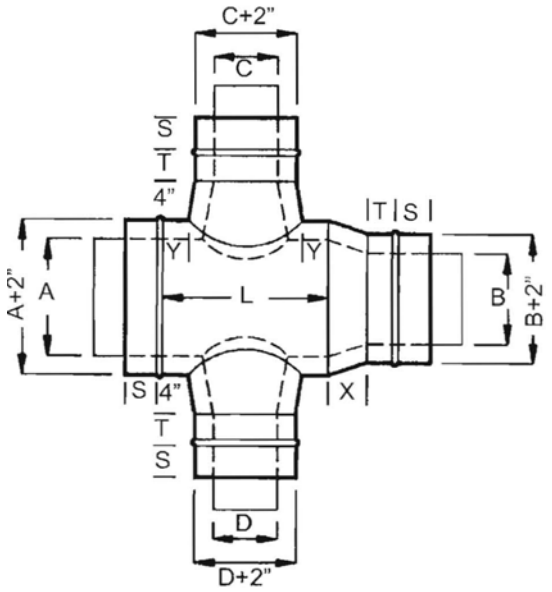

L&L FABRICATION - P.O. BOX 14439 - 5936 EDEN DR - FORT WORTH, TX 76117
(817)834-7146 *Voice* - (817)834-2971 *Fax* - spiral@landlfab.com

HIGH EFFICIENCY TEES
DOUBLE WALL

L&L Fabrication
HVAC Metal Products

HIGH EFFICIENCY TEE **HT1**

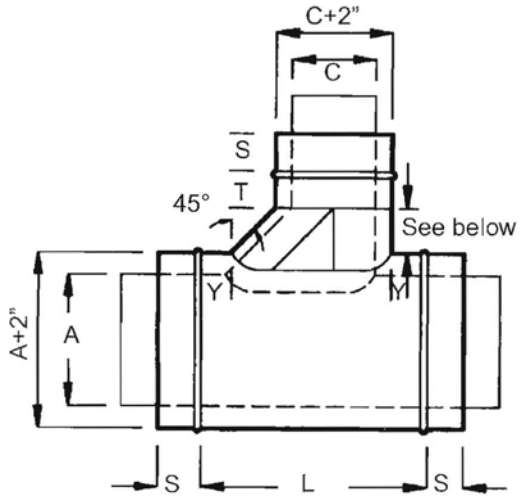

3" THROUGH 16" DIA TAP = 6" LONG

17" AND LARGER DIA TAP = 12" LONG

REDUCING HIGH EFFICIENCY TEE **HT1R**

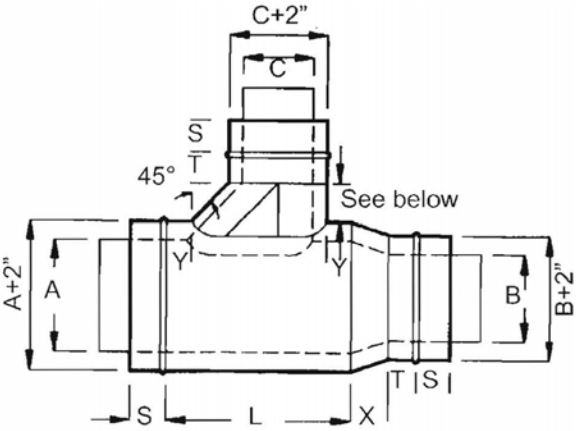

3" THROUGH 16" DIA TAP = 6" LONG

17" AND LARGER DIA TAP = 12" LONG

180° HIGH EFFICIENCY CROSS **HT2**

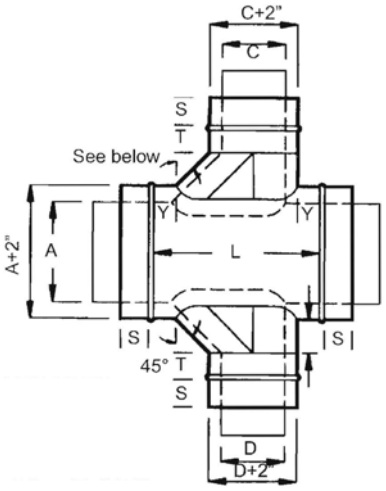

3" THROUGH 16" DIA TAP = 6" LONG

17" AND LARGER DIA TAP = 12" LONG

180° REDUCING HIGH EFFICIENCY CROSS **HT2R**

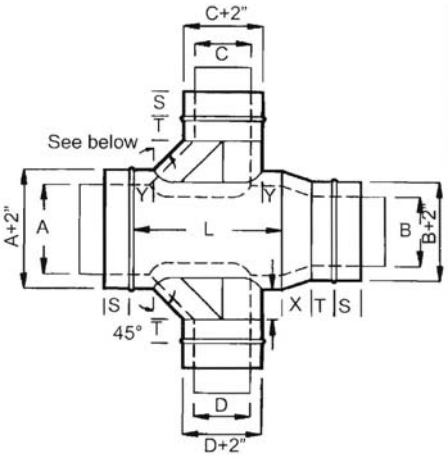

3" THROUGH 16" DIA TAP = 6" LONG

17" AND LARGER DIA TAP = 12" LONG

L&L FABRICATION - P.O. BOX 14439 - 5936 EDEN DR - FORT WORTH, TX 76117
(817)834-7146 *Voice* - **(817)834-2971** *Fax* - **spiral@landlfab.com**

STRAIGHT LATERALS
DOUBLE WALL

Fabrication
HVAC Metal Products

LATERAL **L1**

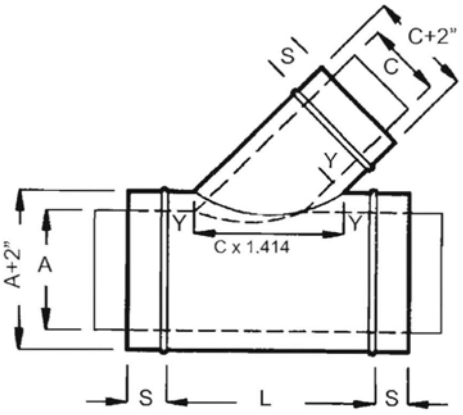

REDUCING LATERAL **L1R**

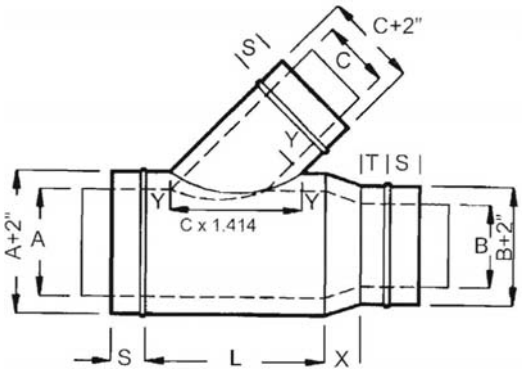

180° LATERAL CROSS **L2**

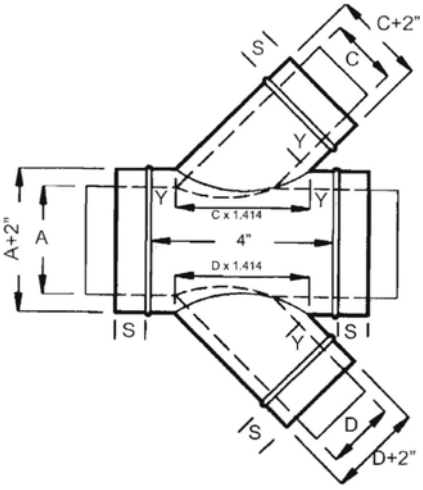

180° REDUCING LATERAL CROSS **L2R**

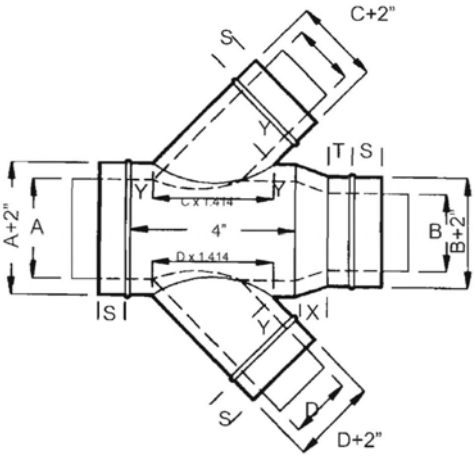

L&L FABRICATION - P.O. BOX 14439 - 5936 EDEN DR - FORT WORTH, TX 76117
(817)834-7146 *Voice* - **(817)834-2971** *Fax* - **spiral@landlfab.com**

CONICAL LATERALS
DOUBLE WALL

Fabrication
HVAC Metal Products

CONICAL LATERAL **CL1**

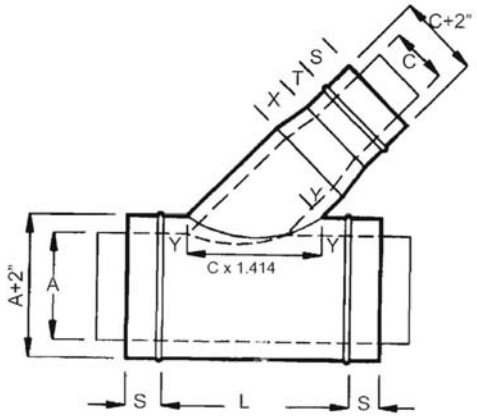

REDUCING CONICAL LATERAL **CL1R**

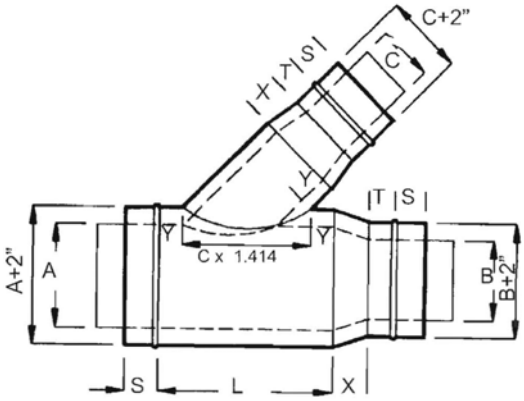

180° CONICAL LATERAL CROSS **CL2**

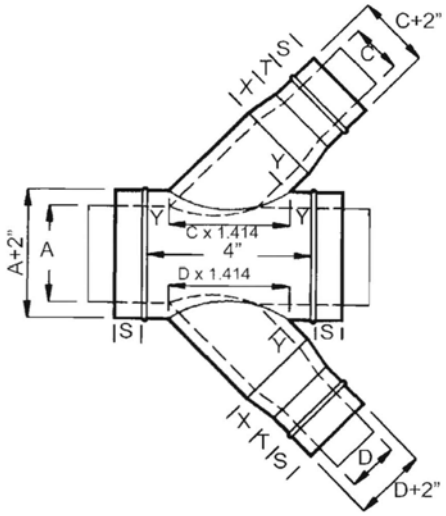

180° REDUCING CONICAL LATERAL CROSS **CL2R**

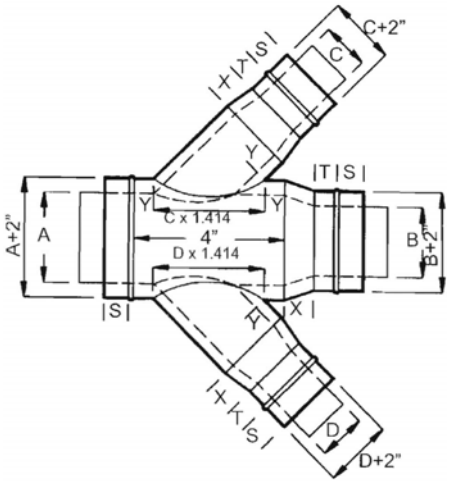

MISCELLANEOUS
DOUBLE WALL

L&L Fabrication HVAC Metal Products

OFFSET **OS**

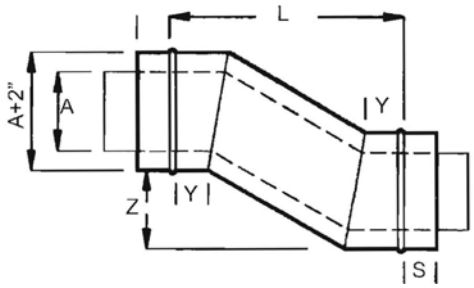

BELL MOUTH (STANDARD RADIUS) **BM**
(SHORT RADIUS) **BMS**

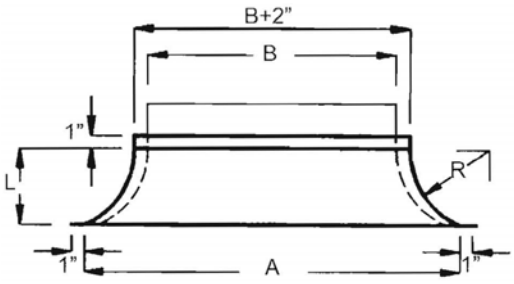

Dimensions are approximate. Consult factory for exact dimensions.

Y BRANCH **Y2**

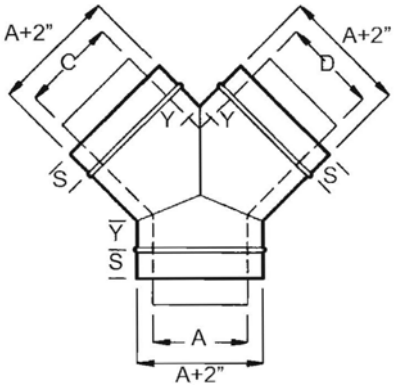

REDUCING Y BRANCH **Y2R**

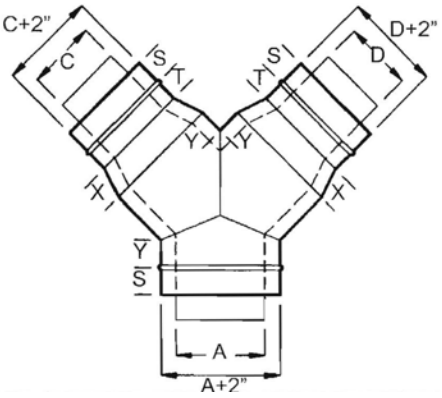

BULL HEAD TEE **BT**
(WITH 1 HEEL VANE) **BTV**

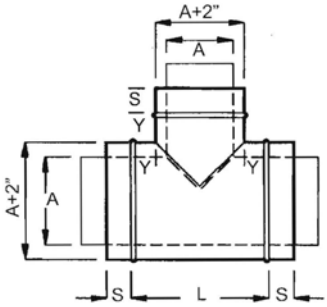

REDUCING BULL HEAD TEE **BTR**
(WITH 1 HEEL VANE) **BTRV**

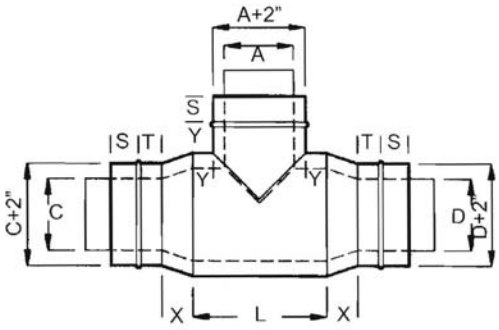

MISCELLANEOUS
DOUBLE WALL

L&L Fabrication HVAC Metal Products

CONCENTRIC REDUCER **R1**

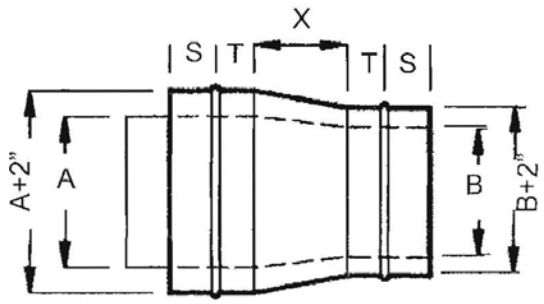

ECCENTRIC REDUCER **ER-1**

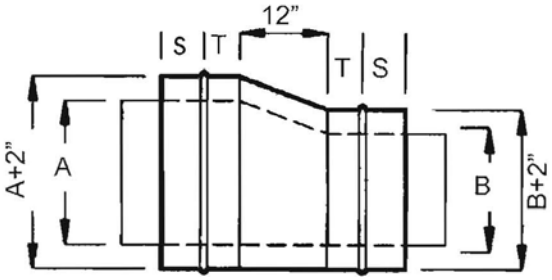

12" MINIMUM LENGTH

END PLUG DUCT **DEP**

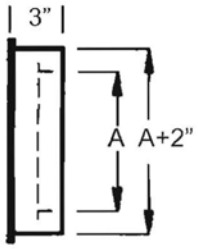

END CAP FITTING **FEC**

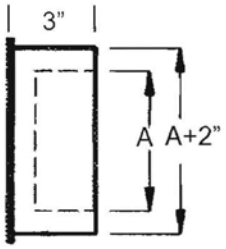

SQUARE TO ROUND **SR-QR**

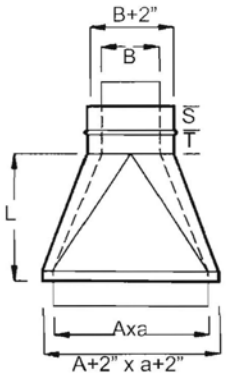

DUCT COUPLING **DC**

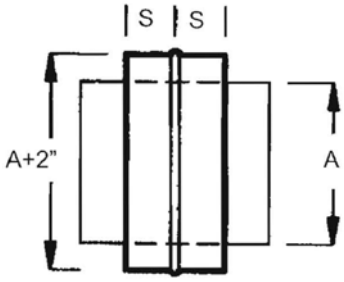

FITTING COUPLING **FC**

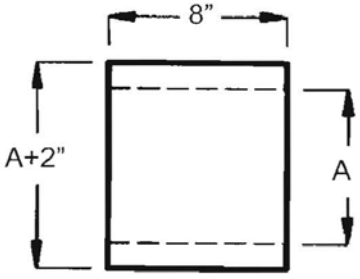

CONNECTORS
DOUBLE WALL

DUCT CONNECTOR
VAN STONE ANGLE RING ON 1 END

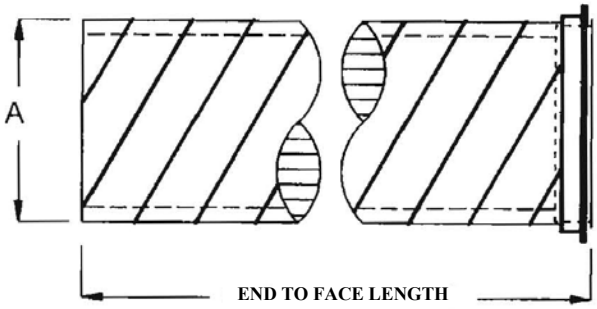

DUCT CONNECTOR
VAN STONE ANGLE RING ON BOTH ENDS

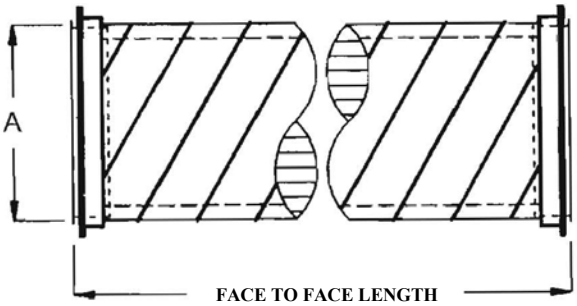

DUCT CONNECTOR
ANGLE RING ON 1 END
SOLID WELDED OR TACK WELDED

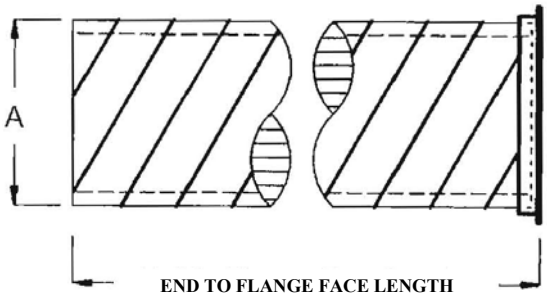

DUCT CONNECTOR
ANGLE RING ON BOTH ENDS
SOLID WELDED OR TACK WELDED

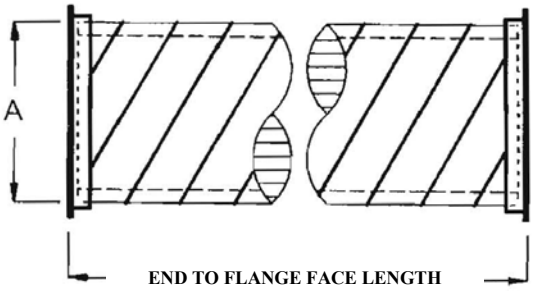

FITTING CONNECTOR
ANGLE RING ON FITTING END
SOLID WELDED OR TACK WELDED

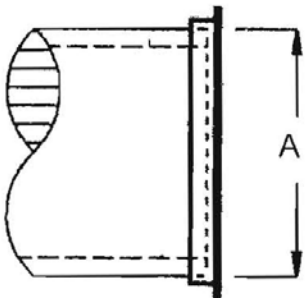

FITTING CONNECTOR
VAN STONE ANGLE RING ON FITTING END

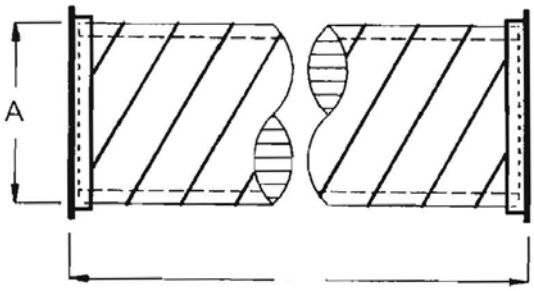

L&L FABRICATION - P.O. BOX 14439 - 5936 EDEN DR - FORT WORTH, TX 76117
(817)834-7146 *Voice* - **(817)834-2971** *Fax* - **spiral@landlfab.com**

SPIRAL PIPE
OVAL SINGLE WALL

L&L Fabrication HVAC Metal Products

OVAL PIPE GAUGE SCHEDULE

Major axis to 24”	26 Gauge
Major axis 26” - 42”	24 Gauge
Major axis 44” - 66”	22 Gauge
Major axis 68” - 96”	20 Gauge

OVAL FITTINGS GAUGE SCHEDULE

Major axis to 24”	24 Gauge
Major axis 26” - 42”	22 Gauge
Major axis 44” - 66”	20 Gauge
Major axis 68” - 96”	18 Gauge

LONGITUDINAL SEAM PIPE

Major axis to 24”	24 Gauge
Major axis 26” - 42”	22 Gauge
Major axis 44” - 60”	20 Gauge
Major axis 62” - 96”	18 Gauge

OVAL DOUBLE WALL DIMENSIONS

A	-	Inlet size
B	-	Outlet size
C	-	Branch size
D	-	Branch size
L	-	Body Length
R	-	Center Line Radius
S	-	2”
Y	-	2”
T	-	1”
X	-	12” with A-B or less
X	-	24” with A-B greater than 18”

ELBOW CONSTRUCTION

Elbow Angle	*Number of Gores*
Up to 36°	2
37° - 72°	3
73° - 90°	5

Manufactured from galvanized steel, lockforming quality meeting ASTM 924.
All products fabricated at building and construction wage rates with S.M.W.I.A. Yellow Labels

L&L FABRICATION - P.O. BOX 14439 - 5936 EDEN DR - FORT WORTH, TX 76117
(817)834-7146 *Voice* - **(817)834-2971** *Fax* - **spiral@landlfab.com**

OVAL ELBOWS

90° 5-PIECE OVAL ELBOW
EASY BEND axA **OEE5-90**
HARD BEND Axa **OHE5-90**

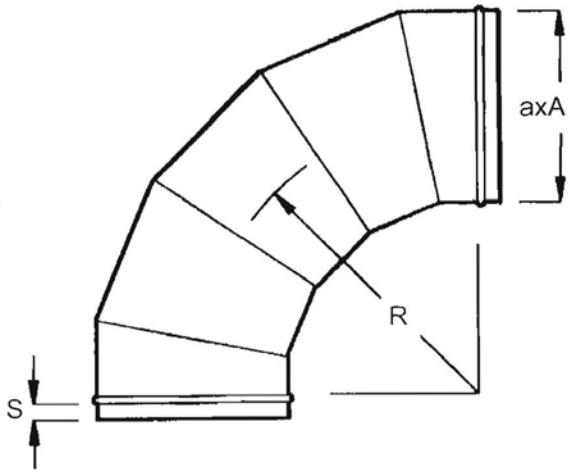

45° 3-PIECE OVAL ELBOW
EASY BEND axA **OEE3-45**
HARD BEND Axa **OHE3-45**

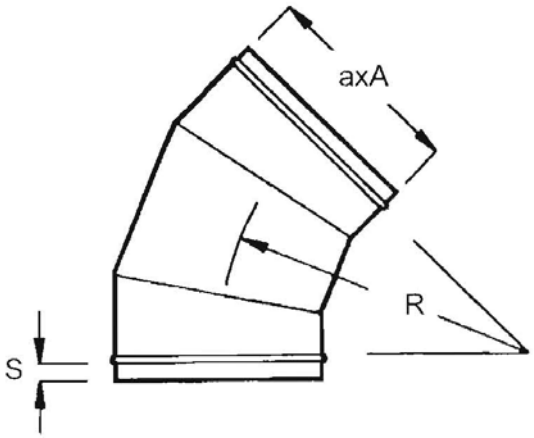

60° 3-PIECE OVAL ELBOW
EASY BEND axA **OE3-60**
HARD BEND Axa **OHE3-60**

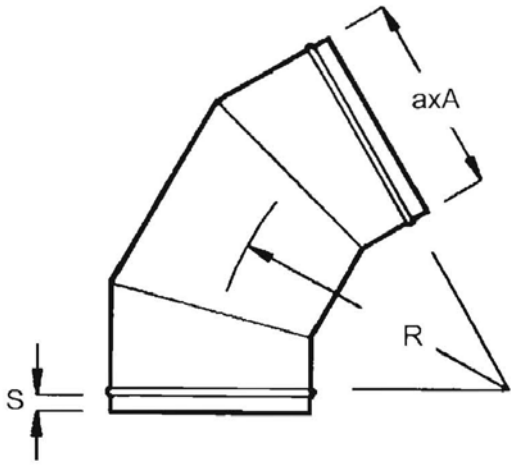

30° 2-PIECE ELBOW
EASY BEND axA **OEE2-30**
HARD BEND Axa **OHE2-30**

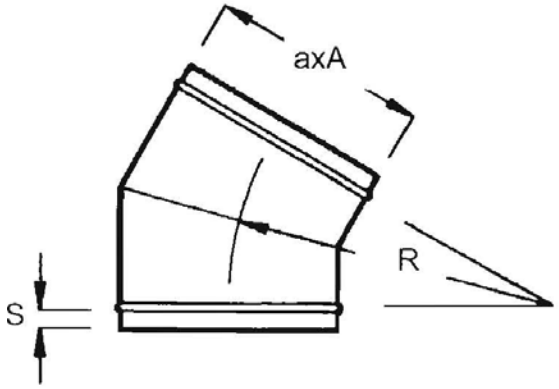

L&L FABRICATION - P.O. BOX 14439 - 5936 EDEN DR - FORT WORTH, TX 76117
(817)834-7146 *Voice* - **(817)834-2971** *Fax* - **spiral@landlfab.com**

OVAL ELBOWS

L&L Fabrication
HVAC Metal Products

90° 2-PIECE OVAL ELBOW
HARD BEND Axa **OHEV2-90**
NO VANES **OHE2-90**

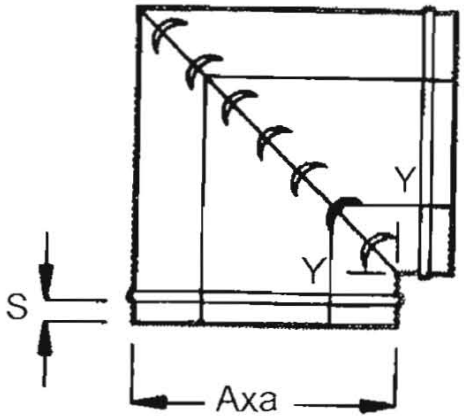

EASY BEND axA **OEEV2-90**
NO VANES **OEEV2-90**

22.5° 2-PIECE ELBOW
HARD BEND Axa **OHE2-22.5**
EASY BEND axA **OEE2-22.5**

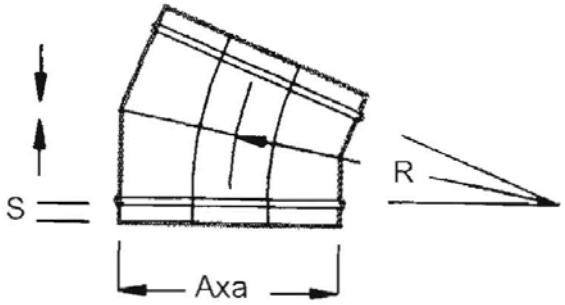

90° 3-PIECE ELBOW
WITH STRAIGHT LATERAL
Axa HARD BEND **OHHTE 3-90**
axA EASY BEND **OEHTE 3-90**

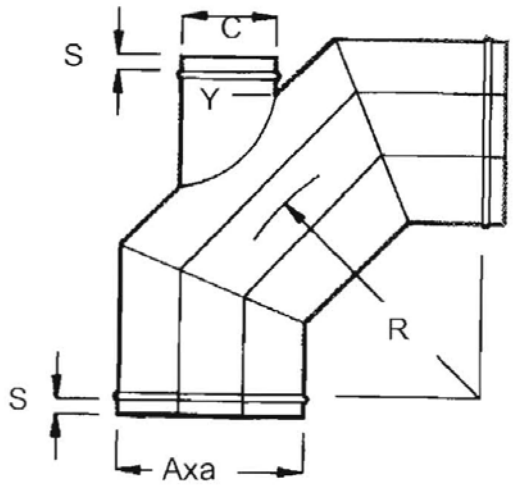

45° 2-PIECE ELBOW
WITH STRAIGHT LATERAL
Axa HARD BEND **OHHTE2-45**
axA EASY BEND **OEHTE2-45**

$$L = \frac{C \times 1.414}{2} + Y$$

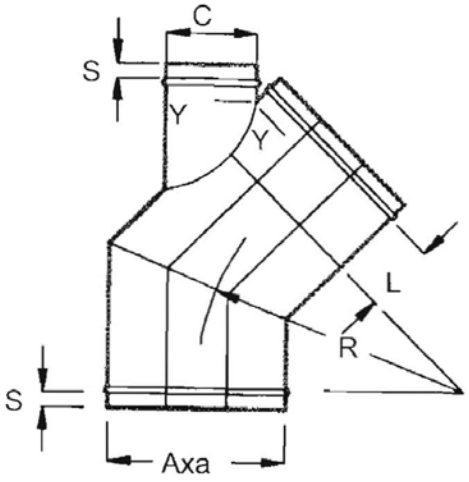

L&L FABRICATION - P.O. BOX 14439 - 5936 EDEN DR - FORT WORTH, TX 76117
(817)834-7146 *Voice* - **(817)834-2971** *Fax* - **spiral@landlfab.com**

OVAL STRAIGHT TEES

L&L Fabrication
HVAC Metal Products

OVAL STRAIGHT TEE **OT1**

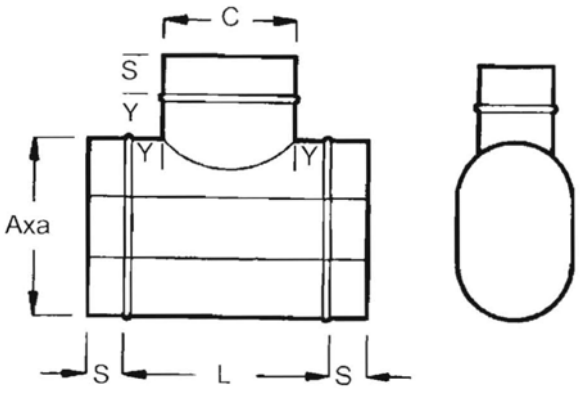

OVAL REDUCING TEE **OT1R**

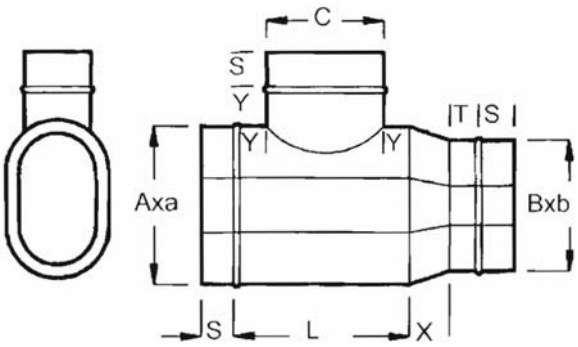

180° OVAL STRAIGHT CROSS **OT2**

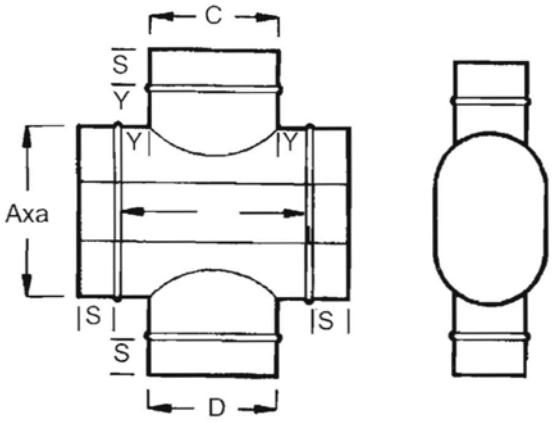

180° OVAL REDUCING CROSS **OT2R**

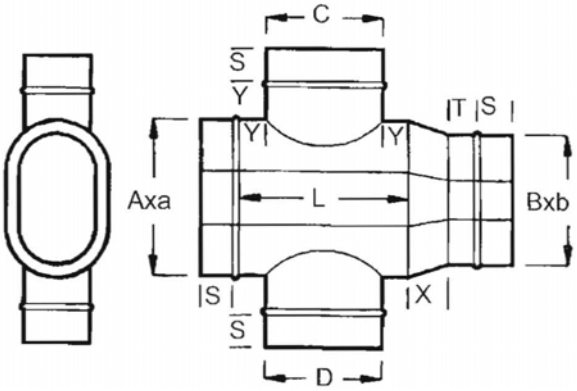

L&L FABRICATION - P.O. BOX 14439 - 5936 EDEN DR - FORT WORTH, TX 76117
(817)834-7146 *Voice* - **(817)834-2971** *Fax* - **spiral@landlfab.com**

OVAL CONICAL TEES

OVAL CONICAL TEE **OCT1**

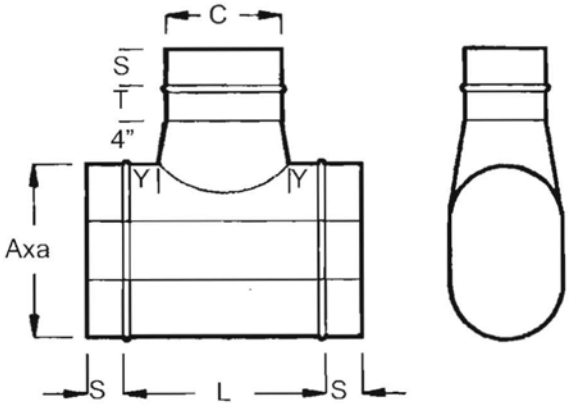

OVAL REDUCING CONICAL TEE **OCT1R**

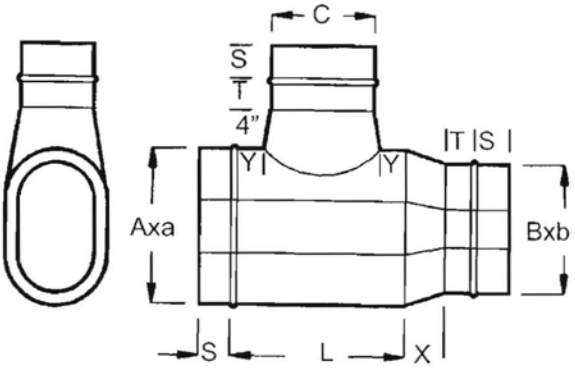

180° OVAL CONICAL CROSS **OCT2**

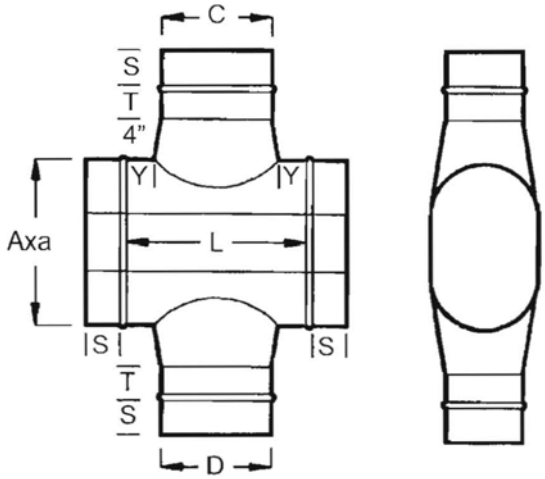

180° OVAL REDUCING CONICAL CROSS **OCT2R**

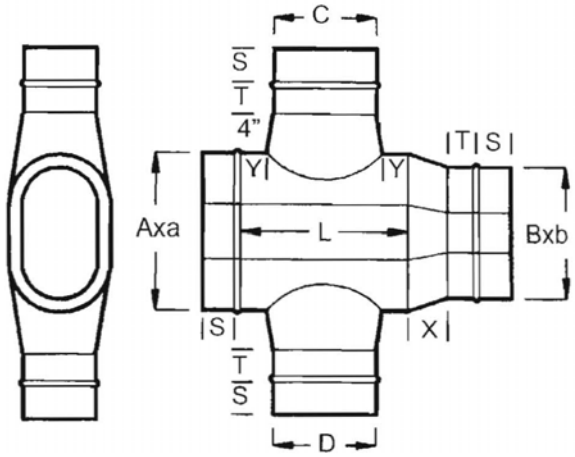

L&L FABRICATION - P.O. BOX 14439 - 5936 EDEN DR - FORT WORTH, TX 76117
(817)834-7146 *Voice* - **(817)834-2971** *Fax* - **spiral@landlfab.com**

OVAL BULLHEAD TEES

BULLHEAD TEE
(WITH 1 HEEL VANE

OBT
OBTV
(SPECIFY HARD OR EASY

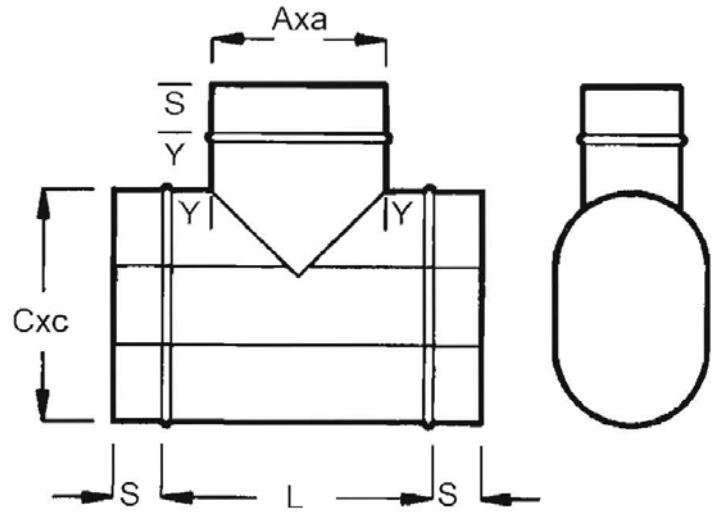

BULLHEAD TEE REDUCING
(WITH 1 HEEL VANE)

OBTR
OBTRV
SPECIFY HARD OR EASY

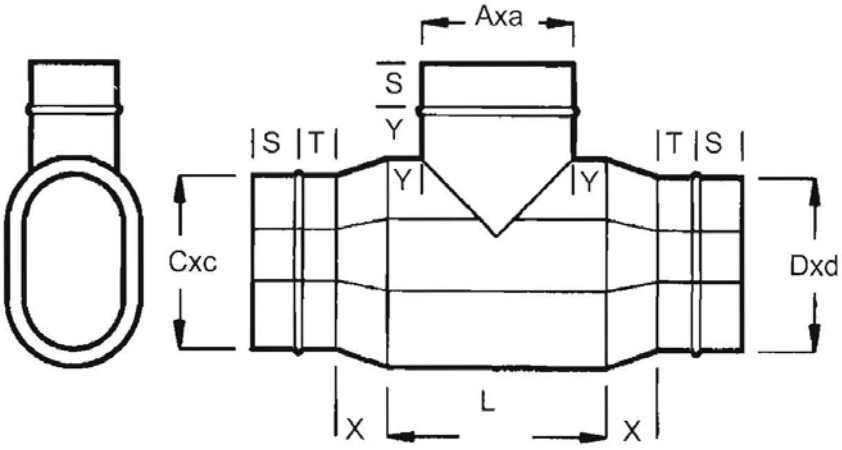

L&L FABRICATION - P.O. BOX 14439 - 5936 EDEN DR - FORT WORTH, TX 76117
(817)834-7146 *Voice* - **(817)834-2971** *Fax* - **spiral@landlfab.com**

OVAL LATERALS

L&L Fabrication HVAC Metal Products

OVAL LATERAL **OL1**

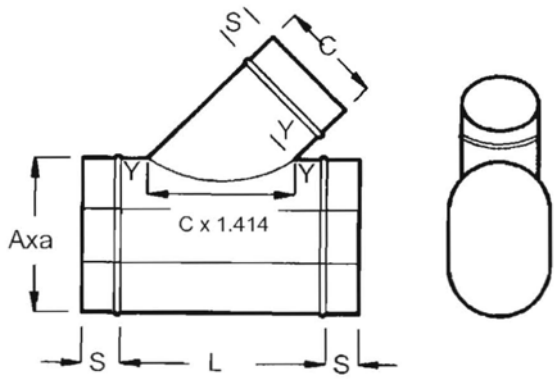

OVAL REDUCING LATERAL **OL1R**

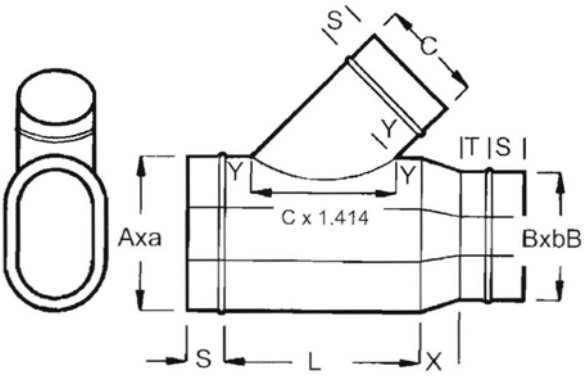

180° OVAL LATERAL CROSS **OL2**

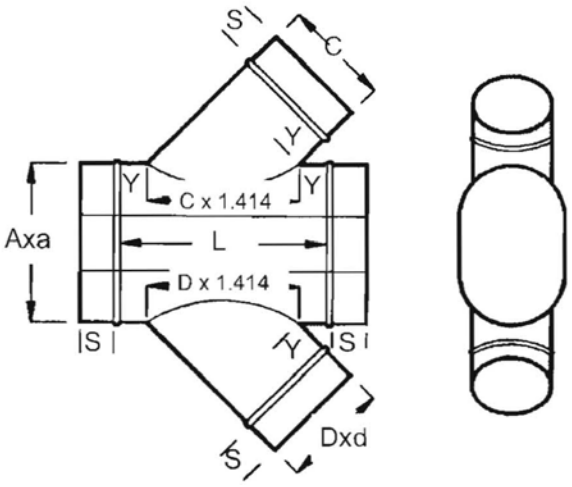

180° OVAL REDUCING LATERAL CROSS **OL2R**

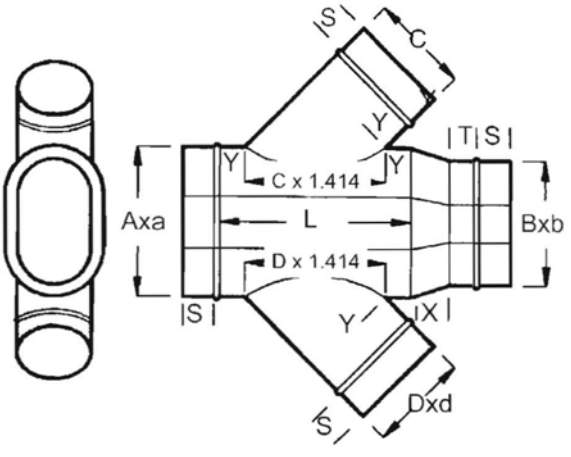

L&L FABRICATION - P.O. BOX 14439 - 5936 EDEN DR - FORT WORTH, TX 76117
(817)834-7146 *Voice* - **(817)834-2971** *Fax* - **spiral@landlfab.com**

HIGH EFFICIENCY TEES

Fabrication
HVAC Metal Products

HIGH EFFICIENCY TEE **OHT1**

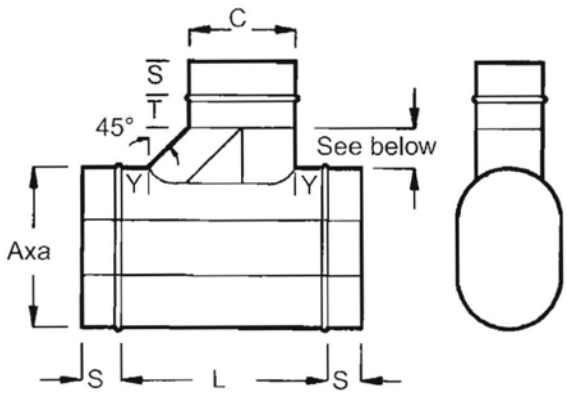

3" THROUGH 16" DIA TAP = 6" LONG

17" AND LARGER DIA TAP = 12" LONG

REDUCING HIGH EFFICIENCY TEE **OHT1R**

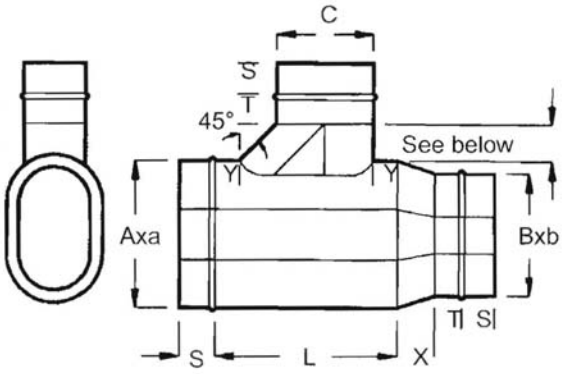

3" THROUGH 16" DIA TAP = 6" LONG

17" AND LARGER DIA TAP = 12" LONG

180° HIGH EFFICIENCY CROSS **OHT2**

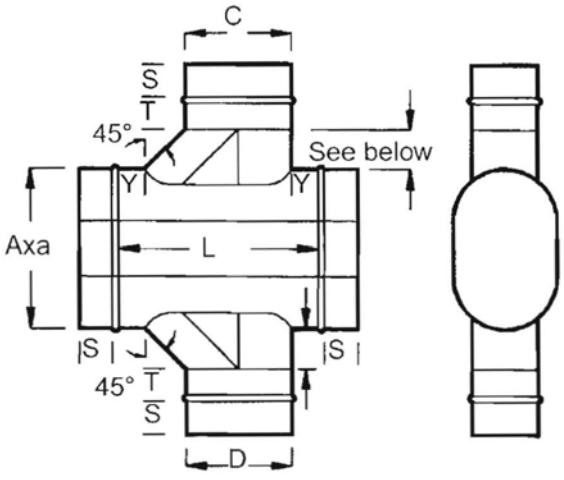

3" THROUGH 16" DIA TAP = 6" LONG

17" AND LARGER DIA TAP = 12" LONG

180° REDUCING HIGH EFFICIENCY CROSS **OHT2R**

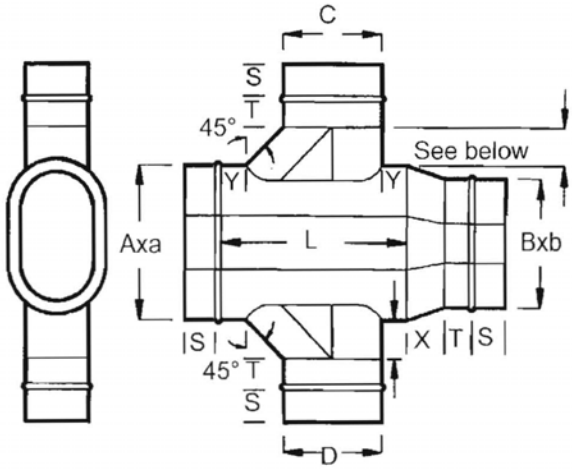

3" THROUGH 16" DIA TAP = 6" LONG

17" AND LARGER DIA TAP = 12" LONG

L&L FABRICATION - P.O. BOX 14439 - 5936 EDEN DR - FORT WORTH, TX 76117
(817)834-7146 *Voice* - **(817)834-2971** *Fax* - **spiral@landlfab.com**

OVAL CONICAL LATERALS

Fabrication
HVAC Metal Products

OVAL CONICAL LATERAL **OCL1**

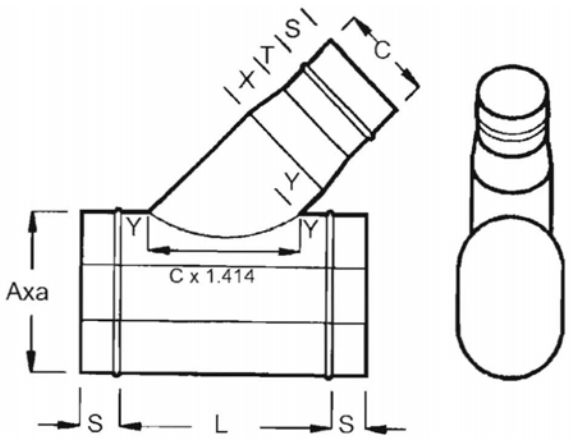

OVAL REDUCING CONICAL LATERAL
OCL1R

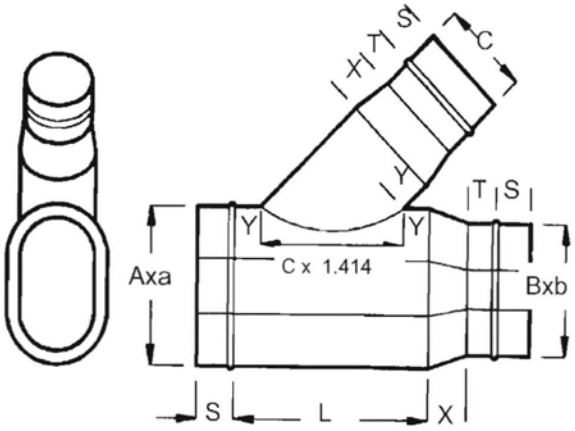

180° OVAL CONICAL LATERAL CROSS
OCL2

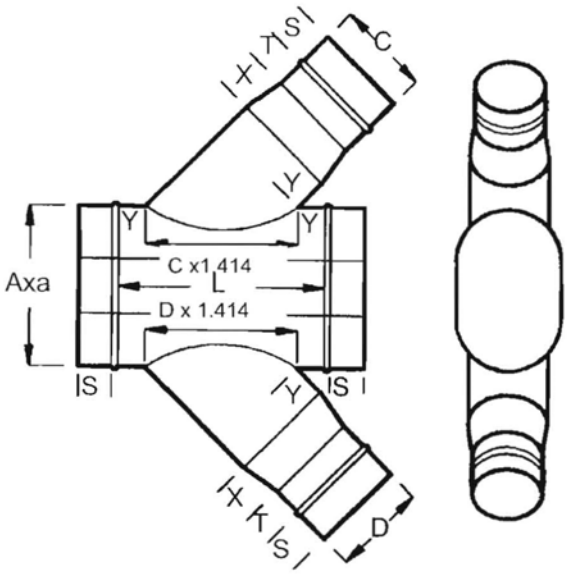

180° OVAL REDUCING CONICAL LATERAL CROSS **CL2R**

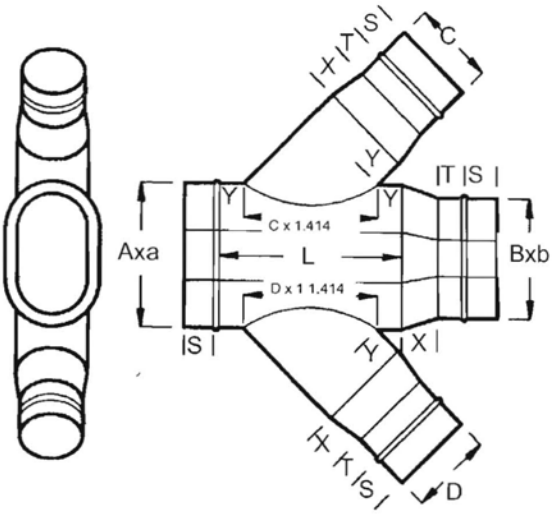

L&L FABRICATION - P.O. BOX 14439 - 5936 EDEN DR - FORT WORTH, TX 76117
(817)834-7146 *Voice* - **(817)834-2971** *Fax* - **spiral@landlfab.com**

OVAL MISCELLANEOUS

L&L Fabrication HVAC Metal Products

CONCENTRIC REDUCER **OR-1**
OVAL TO ROUND

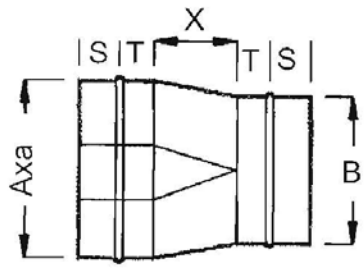

CONCENTRIC REDUCER **OR-5**
OVAL TO OVAL

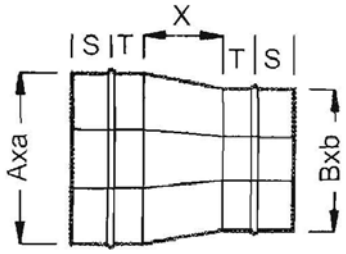

ECCENTRIC REDUCER **ORE-2**
OVAL TO ROUND

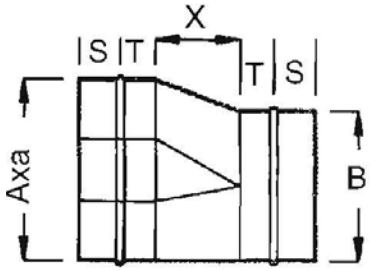

OCCENTRIC REDUCER **ORE-6**
OVAL TO OVAL

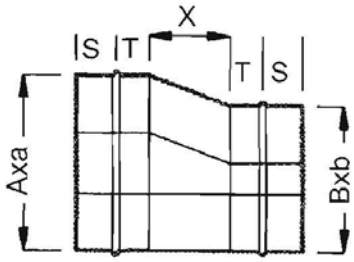

OVAL DUCT COUPLING **ODC**

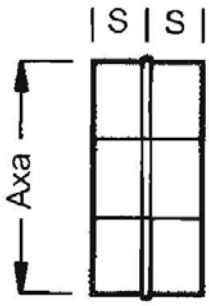

OVAL FITTING COUPLING **OFC**

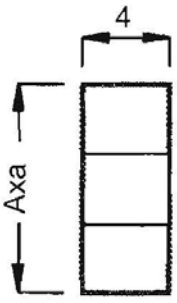

L&L FABRICATION - P.O. BOX 14439 - 5936 EDEN DR - FORT WORTH, TX 76117
(817)834-7146 *Voice* - **(817)834-2971** *Fax* - **spiral@landlfab.com**

OVAL MISCELLANEOUS

L&L Fabrication HVAC Metal Products

OVAL OFFSET **OHOS**
HARD BEND A x a

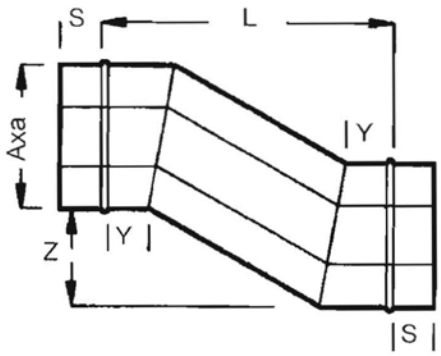

OVAL OFFSET **OEOS**
EASY BEND a x A

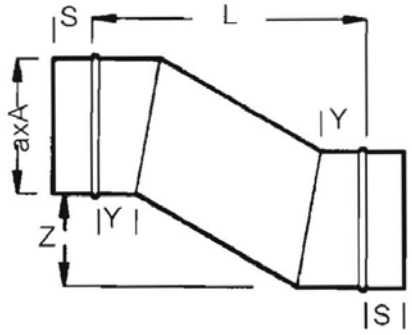

OVAL REDUCING Y BRANCH HARD **OHY2R**
EASY **OEY2R**

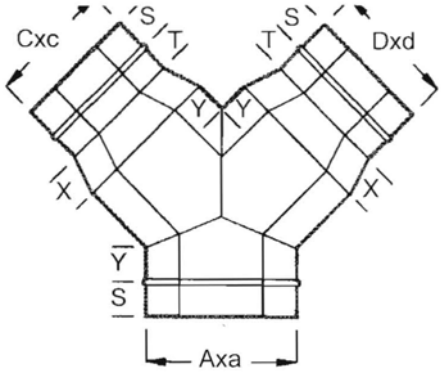

OVAL BELL MOUTH **STANDARD RADIUS** **OBM**
SHORT RADIUS **OBMS**

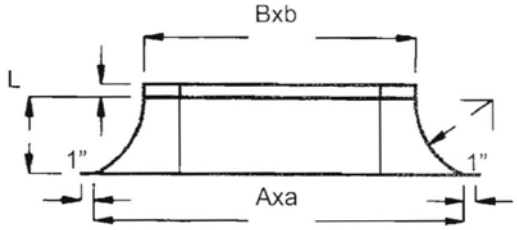

DIMENSIONS ARE APPROXIMATE. CONSULT YOUR FACTORY FOR EXACT DIMENSIONS.

OVAL Y BRANCH **HARD** **OHY2**
EASY **OEY2**

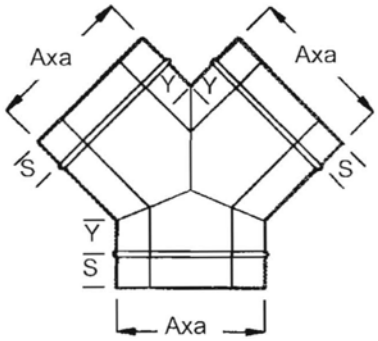

OVAL END

CAP

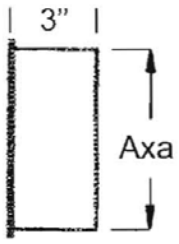

OFEC
FITTING

PLUG

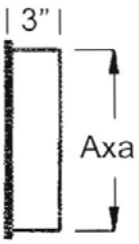

ODEP
DUCT

L&L FABRICATION - P.O. BOX 14439 - 5936 EDEN DR - FORT WORTH, TX 76117
(817)834-7146 *Voice* - **(817)834-2971** *Fax* - **spiral@landlfab.com**

SPIRAL PIPE
OVAL DOUBLE WALL

L&L Fabrication HVAC Metal Products

OVAL PIPE GAUGE SCHEDULE
Outer Pressure Shell: (O.D.)

Major axis to 24”	26 Gauge
Major axis 26” - 42”	24 Gauge
Major axis 44” - 66”	22 Gauge
Major axis 68” - 96”	20 Gauge

INNER LINER BASIC ROUND DIAMETER

Major axis to 24”	26 Gauge Perforated
Major axis 26” - 42”	24 Gauge Perforated
Major axis 44” - 66”	22 Gauge Perforated
Major axis 68” - 96”	20 Gauge Perforated

OVAL FITTINGS GAUGE SCHEDULE
Outer Pressure Shell: (O.D.)

Major axis to 24”	24 Gauge
Major axis 26” - 42”	22 Gauge
Major axis 44” - 66”	20 Gauge
Major axis 68” - 96”	18 Gauge

INNER LINER BASIC ROUND DIAMETER

Major axis to 24”	24 Gauge Solid
Major axis 26” - 42”	22 Gauge Solid
Major axis 44” - 66”	20 Gauge Solid
Major axis 68” - 96”	18 Gauge Solid

LONGITUDINAL SEAM PIPE SCHEDULE
Outer Pressure Shell: (O.D.)

Major axis to 24”	24 Gauge
Major axis 26” - 42”	22 Gauge
Major axis 44” - 66”	20 Gauge
Major axis 68” - 96”	18 Gauge
Liner: (I.D)	Standard Gauge Perforated

ELBOW CONSTRUCTION

ELBOW ANGLE	*NUMBER OF GORES*
Up to 36°	2
37° - 72°	3
73°- 90°	5

OVAL DOUBLE WALL DIMENSIONS

A	-	Inside size of inlet
B	-	Inside size of outlet
C	-	Inside size of branch size
D	-	Inside size of branch size
L	-	Body Length
R	-	Center Line Radius
S	-	2”
Y	-	2”
T	-	1”
X	-	12” with A-B 18” or less
X	-	24” with A-B greater than 18”

INSULATION (1” THICK)

Between the outer pressure shell and the inner liner is 1” thick fiberglass which meets the requirements set forth in NFPA pamphlet #90A (catalog NFPA #255) as to flame spread and smoke developed ratings. The K-value of the insulation at 75° M.T. = .260 BTU

Manufactured from galvanized steel, lockforming quality meeting ASTM 924.
All products fabricated at building and construction wage rates with S.M.W.I.A. Yellow Labels

L&L FABRICATION - P.O. BOX 14439 - 5936 EDEN DR - FORT WORTH, TX 76117
(817)834-7146 *Voice* - **(817)834-2971** *Fax* - **spiral@landlfab.com**

ELBOWS
OVAL DOUBLE WALL

L&L Fabrication
HVAC Metal Products

90° 5-PIECE OVAL ELBOW
EASY BEND axA **OEE5-90**
HARD BEND Axa **OHE5-90**

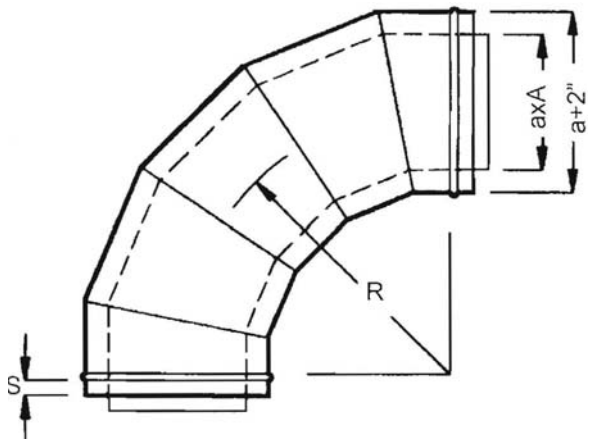

45° 3-PIECE OVAL ELBOW
EASY BEND axA **OEE3-45**
HARD BEND Axa **OHE3-45**

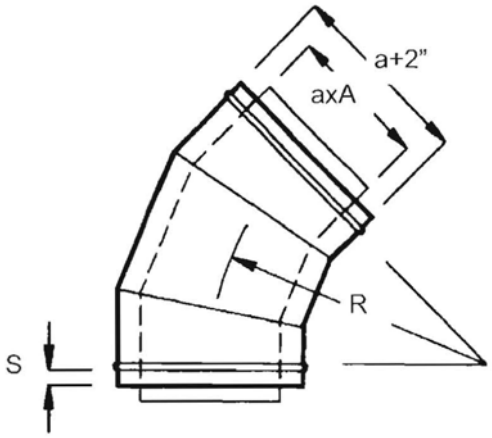

22.5° 2-PIECE OVAL ELBOW
EASY BEND axA **OEE2-22.5**
HARD BEND Axa **OHE3-22.5**

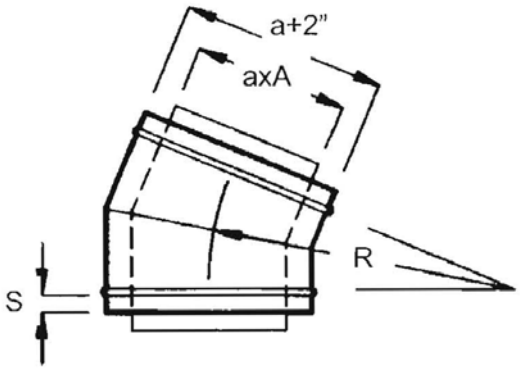

90° 2-PIECE ELBOW
EASY BEND axA **OEEV2-90**
(NO VANES) **OEE2-90**
HARD BEND Axa **OHEV2-90**
(NO VANES) **OHE2-90**

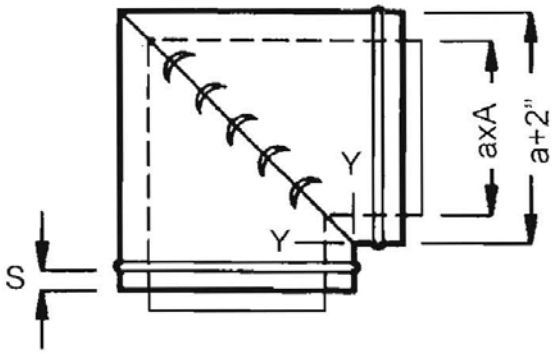

L&L FABRICATION - P.O. BOX 14439 - 5936 EDEN DR - FORT WORTH, TX 76117
(817)834-7146 *Voice* - **(817)834-2971** *Fax* - **spiral@landlfab.com**

ELBOWS
OVAL DOUBLE WALL

L&L Fabrication
HVAC Metal Products

60° 3-PIECE OVAL ELBOW
EASY BEND axA **OEE3-60**
HARD BEND Axa **OHE3-60**

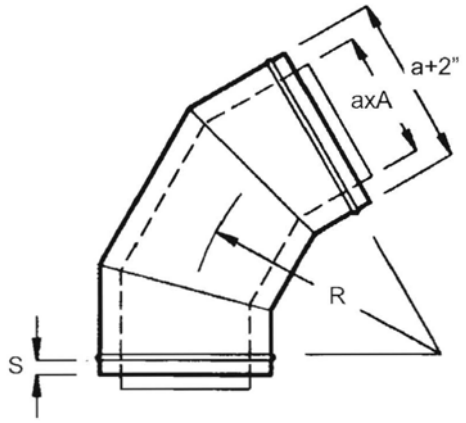

30° 2-PIECE ELBOW
EASY BEND axA **OEE2-30**
HARD BEND Axa **OHE2-30**

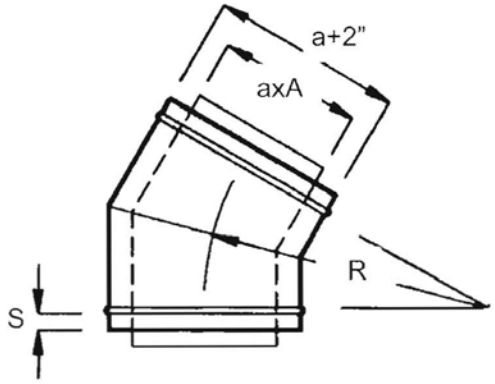

90° 3-PIECE ELBOW
WITH STRAIGHT LATERAL
EASY BEND axA **OEHTE 3-90**
HARD BEND Axa **OHHTE 3-90**

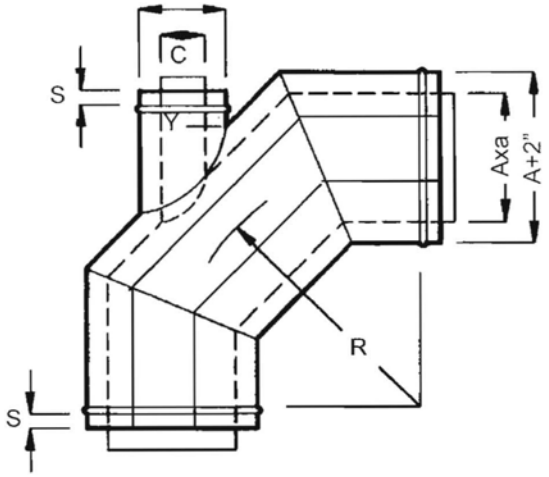

45° 2-PIECE ELBOW
WITH STRAIGHT LATERAL
EASY BEND axA **OEHTE2-45**
HARD BEND Axa **OHHTE2-45**

$$L = \frac{C \times 1.414}{2} + Y$$

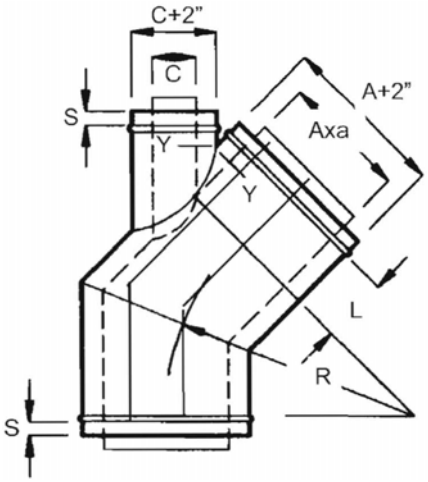

L&L FABRICATION - P.O. BOX 14439 - 5936 EDEN DR - FORT WORTH, TX 76117
(817)834-7146 *Voice* - **(817)834-2971** *Fax* - **spiral@landlfab.com**

STRAIGHT TEES
OVAL DOUBLE WALL

L&L Fabrication
HVAC Metal Products

OVAL TEE **OT1**

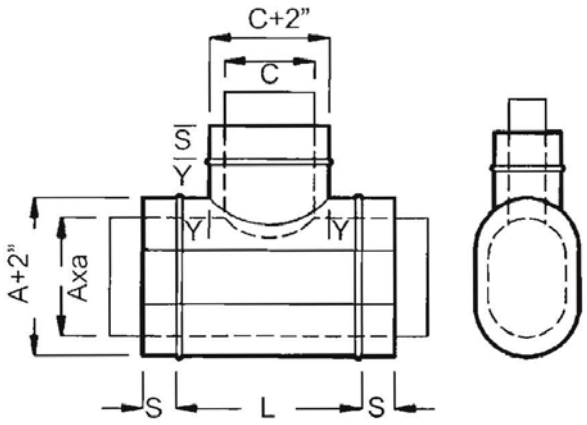

OVAL REDUCING TEE **OT1R**

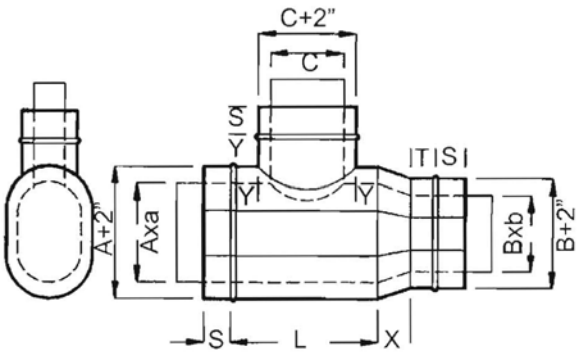

180° OVAL CROSS **OT2**

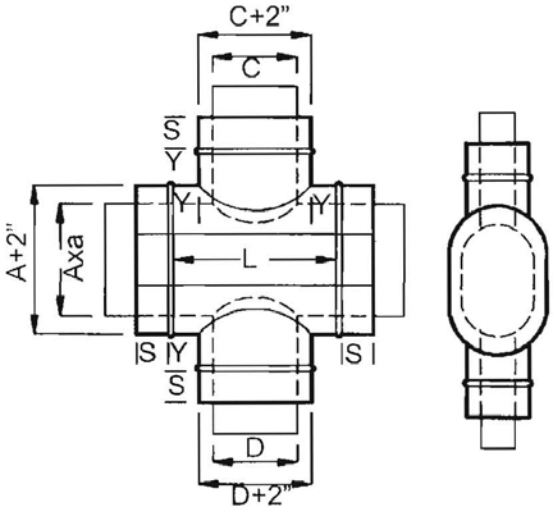

180° OVAL REDUCING CROSS **OT2R**

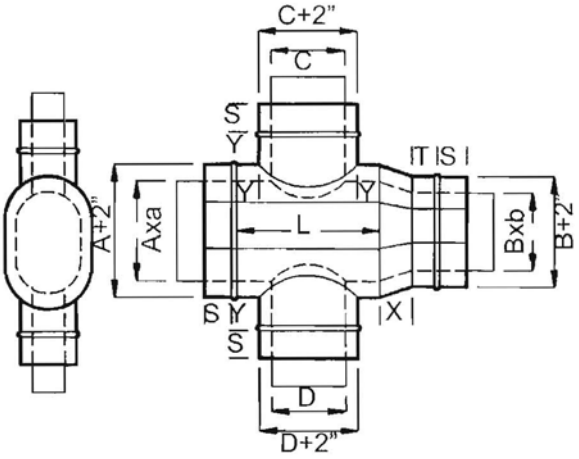

L&L FABRICATION - P.O. BOX 14439 - 5936 EDEN DR - FORT WORTH, TX 76117
(817)834-7146 *Voice* - **(817)834-2971** *Fax* - **spiral@landlfab.com**

CONICAL TEES
OVAL DOUBLE WALL

L&L Fabrication
HVAC Metal Products

OVAL CONICAL TEE **OCT1**

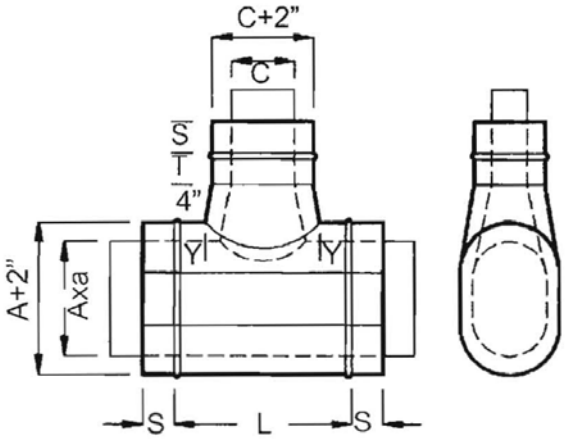

OVAL REDUCING CONICAL TEE **OCT1R**

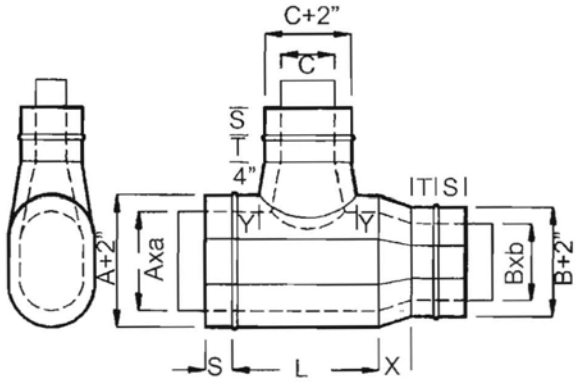

180° OVAL CONICAL CROSS **OCT2**

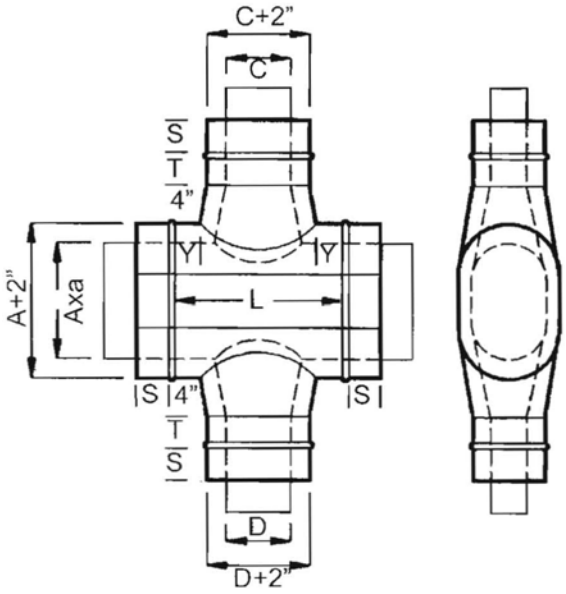

180° OVAL REDUCING CONICAL CROSS **OCT2R**

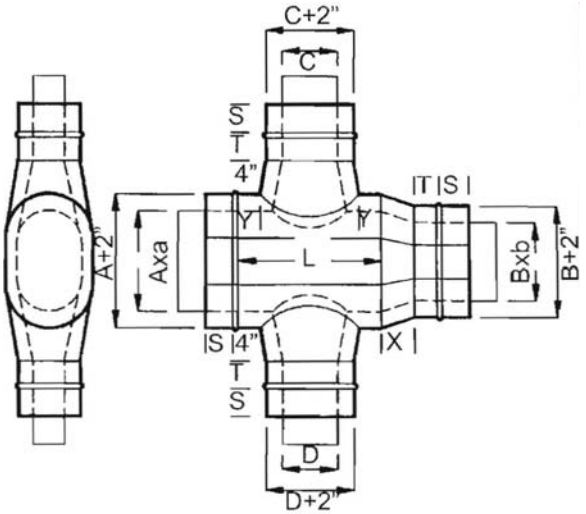

LATERAL TEES
OVAL DOUBLE WALL

Fabrication
HVAC Metal Products

LATERAL **OL1**

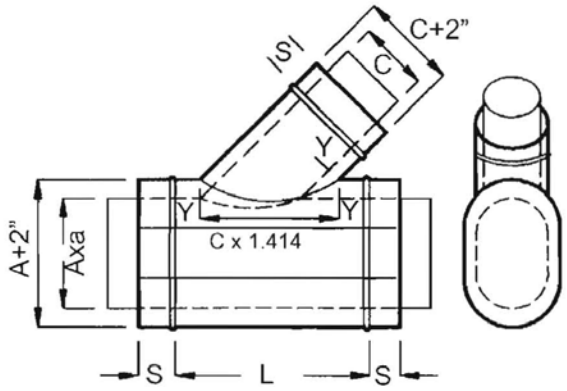

REDUCING LATERAL **OL1R**

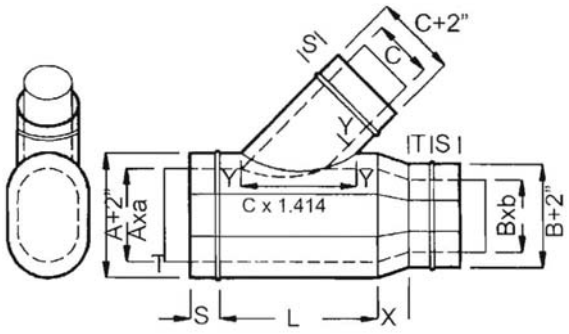

180° LATERAL CROSS **OL2**

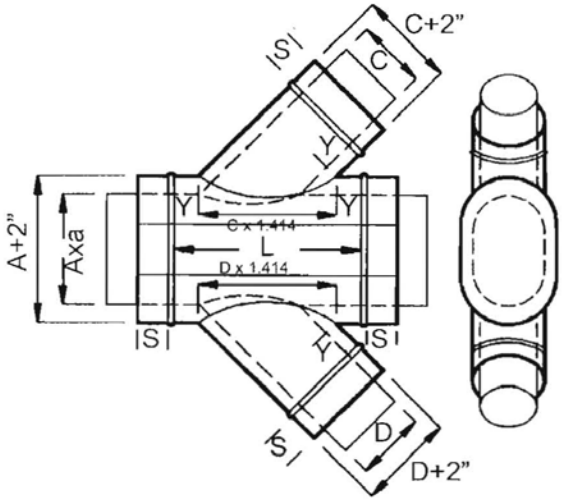

180° REDUCING LATERAL CROSS **OL2R**

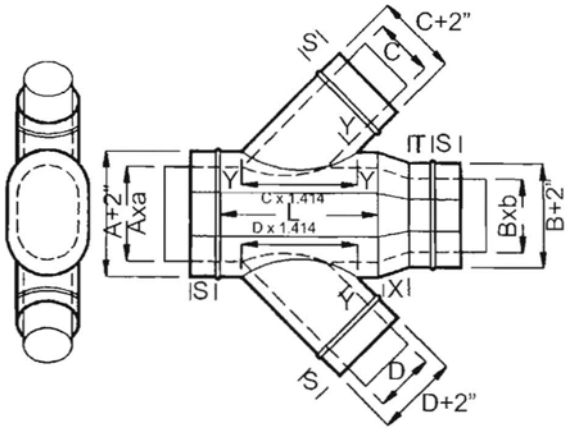

L&L FABRICATION - P.O. BOX 14439 - 5936 EDEN DR - FORT WORTH, TX 76117
(817)834-7146 *Voice* - **(817)834-2971** *Fax* - **spiral@landlfab.com**

HIGH EFFICIENCY TEES
OVAL DOUBLE WALL

Fabrication
HVAC Metal Products

HIGH EFFICIENCY TEE **OHT1**

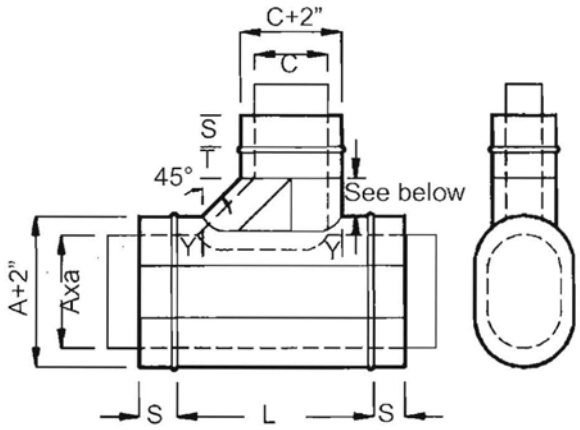

3" THROUGH 16" DIA TAP = 6" LONG

17" AND LARGER DIA TAP = 12" LONG

REDUCING HIGH EFFICIENCY TEE **OHT1R**

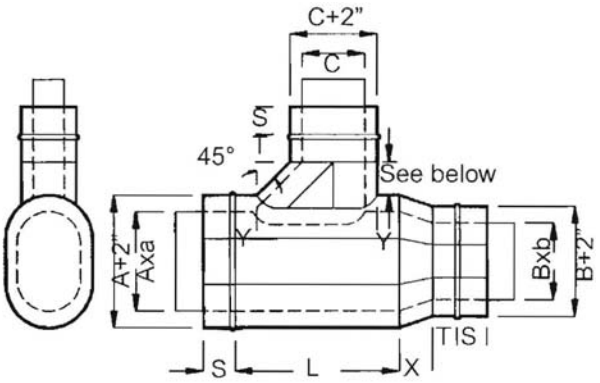

3" THROUGH 16" DIA TAP = 6" LONG

17" AND LARGER DIA TAP = 12" LONG

180° HIGH EFFICIENCY CROSS **OHT2**

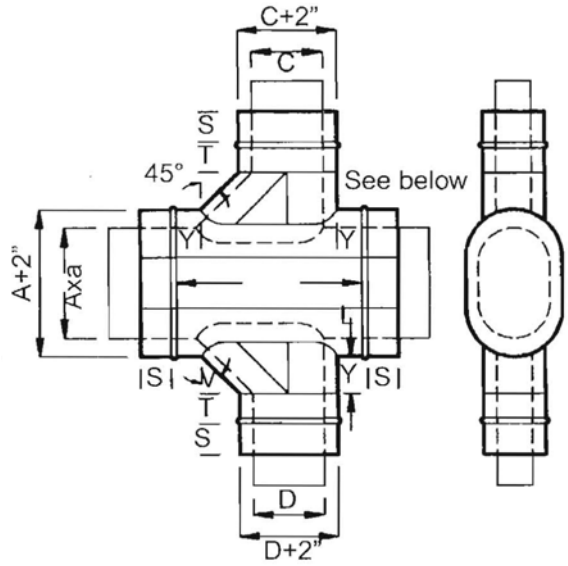

3" THROUGH 16" DIA TAP = 6" LONG

17" AND LARGER DIA TAP = 12" LONG

180° REDUCING HIGH EFFICENCY CROSS **OHT2R**

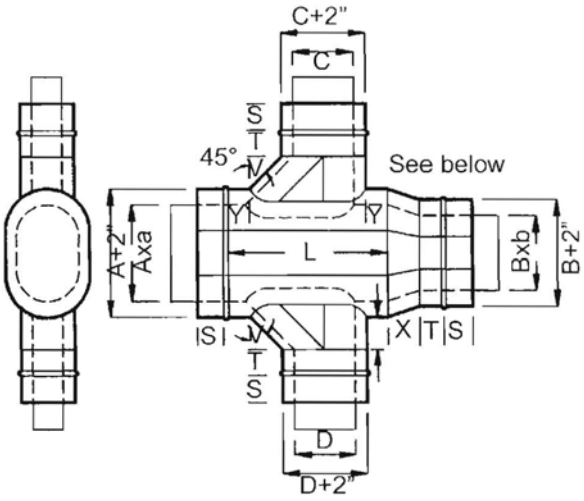

3" THROUGH 16" DIA TAP = 6" LONG

17" AND LARGER DIA TAP = 12" LONG

L&L FABRICATION - P.O. BOX 14439 - 5936 EDEN DR - FORT WORTH, TX 76117
(817)834-7146 *Voice* - **(817)834-2971** *Fax* - **spiral@landlfab.com**

CONICAL LATERALS
OVAL DOUBLE WALL

L&L Fabrication
HVAC Metal Products

CONICAL LATERAL **OCL1**

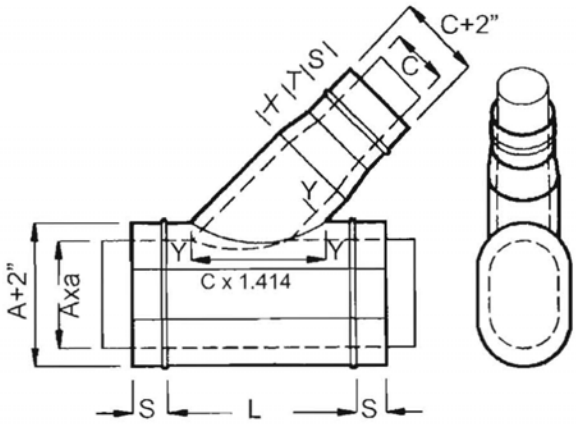

REDUCING CONICAL LATERAL **OCL1R**

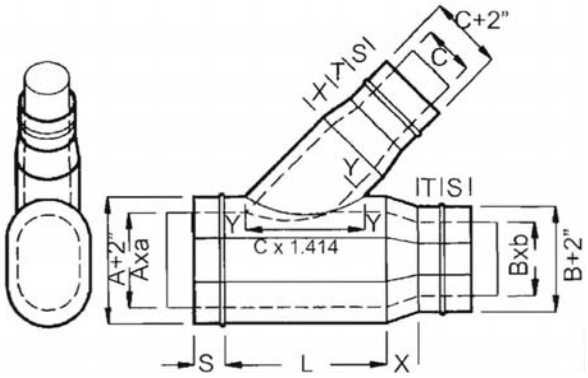

180° CONICAL LATERAL CROSS **OCL2**

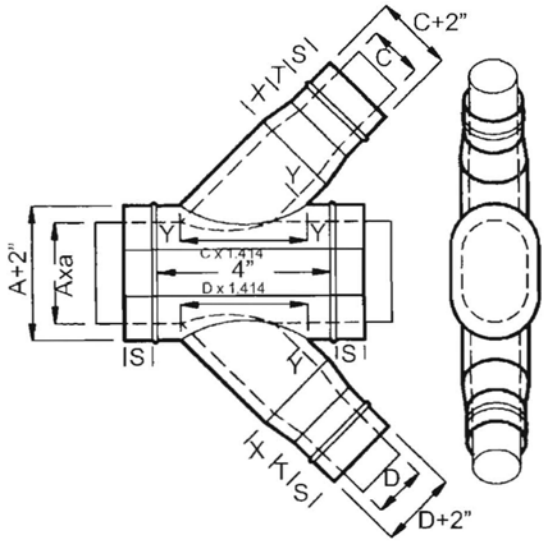

180° REDUCING CONICAL LATERAL CROSS **OCL2R**

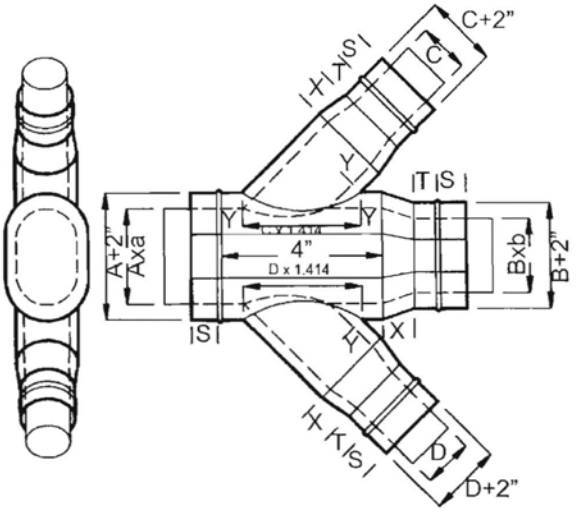

L&L FABRICATION - P.O. BOX 14439 - 5936 EDEN DR - FORT WORTH, TX 76117
(817)834-7146 *Voice* - **(817)834-2971** *Fax* - **spiral@landlfab.com**

MISCELLANEOUS
OVAL DOUBLE WALL

Fabrication
HVAC Metal Products

OFFSET **OEOS**
EASY BEND axA

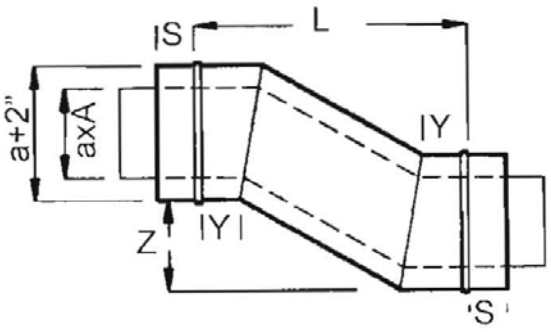

OFFSET **OHOS**
HARD BEND Axa

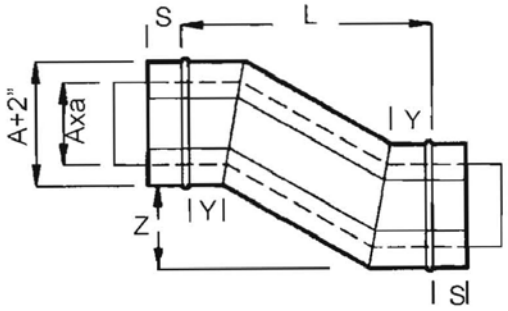

Y BRANCH **OHY2**

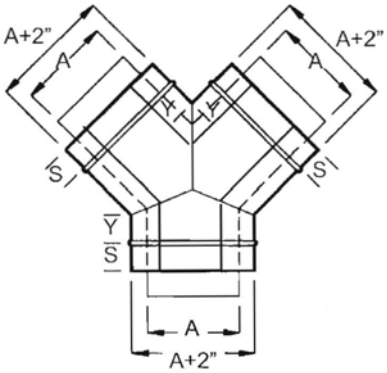

REDUCING Y BRANCH **OHY2R**

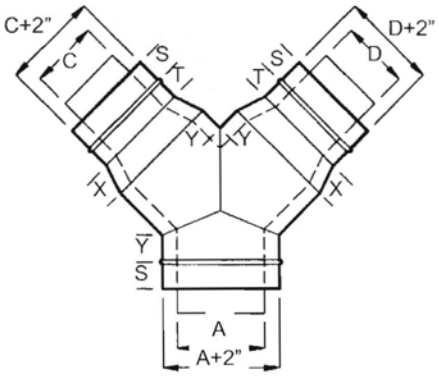

BULL HEAD TEE **OBT**
(WITH 1 HEEL VANE) OVTV
(SPECIFY HARD OR EASY)

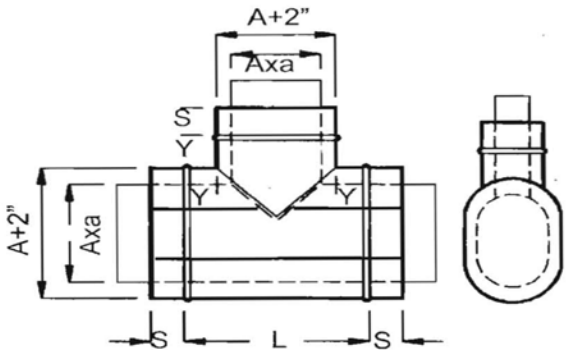

REDUCING BULL HEAD TEE **OBTR**
(WITH 1 HEEL VANE) **OBTRV**
(SPECIFY HARD OREASY)

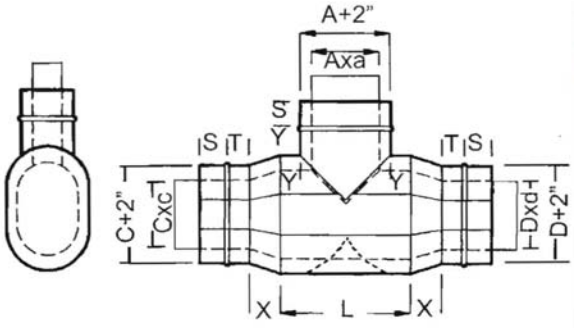

L&L FABRICATION - P.O. BOX 14439 - 5936 EDEN DR - FORT WORTH, TX 76117
(817)834-7146 *Voice* - **(817)834-2971** *Fax* - **spiral@landlfab.com**

MISCELLANEOUS
OVAL DOUBLE WALL

L&L Fabrication
HVAC Metal Products

CONCENTRIC REDUCER **OR1**
(OVAL TO ROUND)

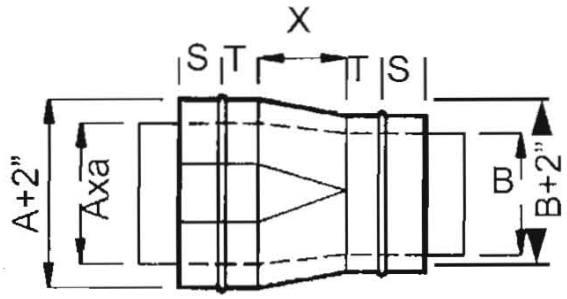

CONCENTRIC REDUCER **OR5**
(OVAL TO OVAL)

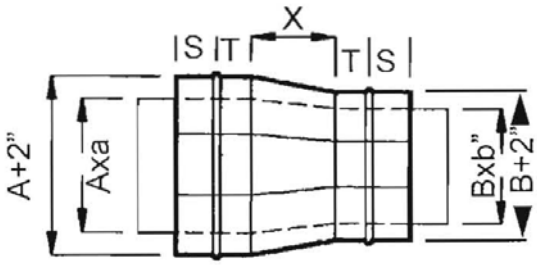

ECCENTRIC REDUCER **ORE2**
(OVAL TO ROUND)

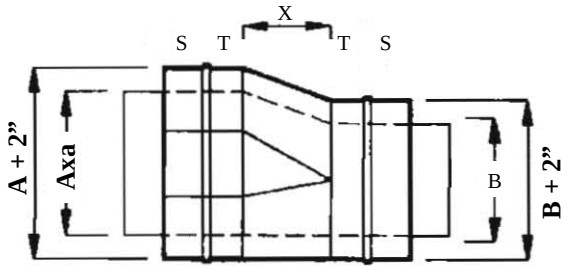

OCCENTRIC REDUCER **ORE6**
(OVAL TO OVAL)

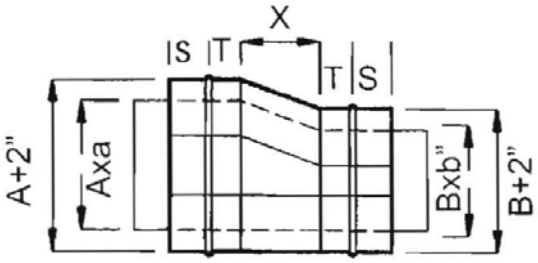

BELL MOUTH
STANDARD RADIUS **OBM**
SHORT RADIUS **OBMS**

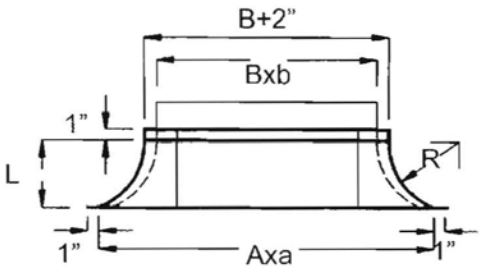

DIMENSIONS ARE APPROXIMATE. CONSULT YOUR FACTORY FOR EXACT DIMENSIONS.

SQUARE TO

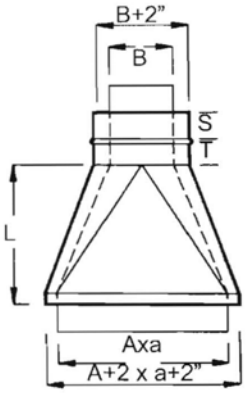

L&L FABRICATION - P.O. BOX 14439 - 5936 EDEN DR - FORT WORTH, TX 76117
(817)834-7146 *Voice* - **(817)834-2971** *Fax* - **spiral@landlfab.com**

MISCELLANEOUS
OVAL DOUBLE WALL

DUCT COUPLING **ODC**
SOLID LINER

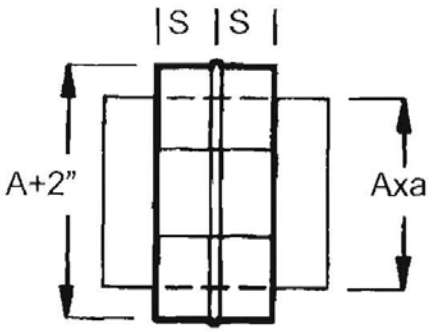

FITTING COUPLING **OFC**
SOLID LINER

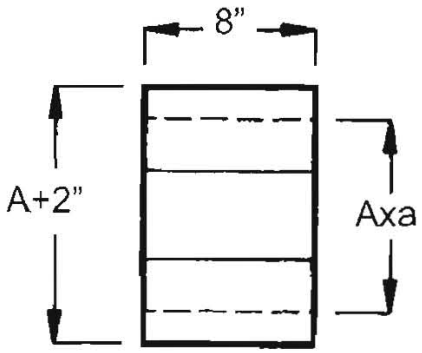

END PLUG (DUCT) **ODEP**

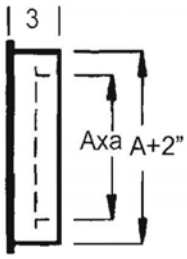

END CAP (FITTING) **OFEC**

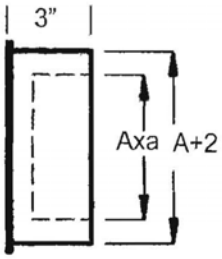

A Division of Maencor, Inc.
MECS
Maencor Engineering & Consulting Services
707 Texas Avenue ☐ P. O. Drawer BA ☐ College Station, Texas 77840 ☐ Phone. (713) 846-3766

June 2, 1975

The accompanying report is based on actual sound and fluid dynamic test data obtained by our laboratory on Lewis & Lambert single and double walled circular pipe and their corresponding fittings.

Meherwan P. Boyce

Dr. Meherwan P. Boyce, P.E.
Vice President

ELBOWS
OVAL DOUBLE WALL

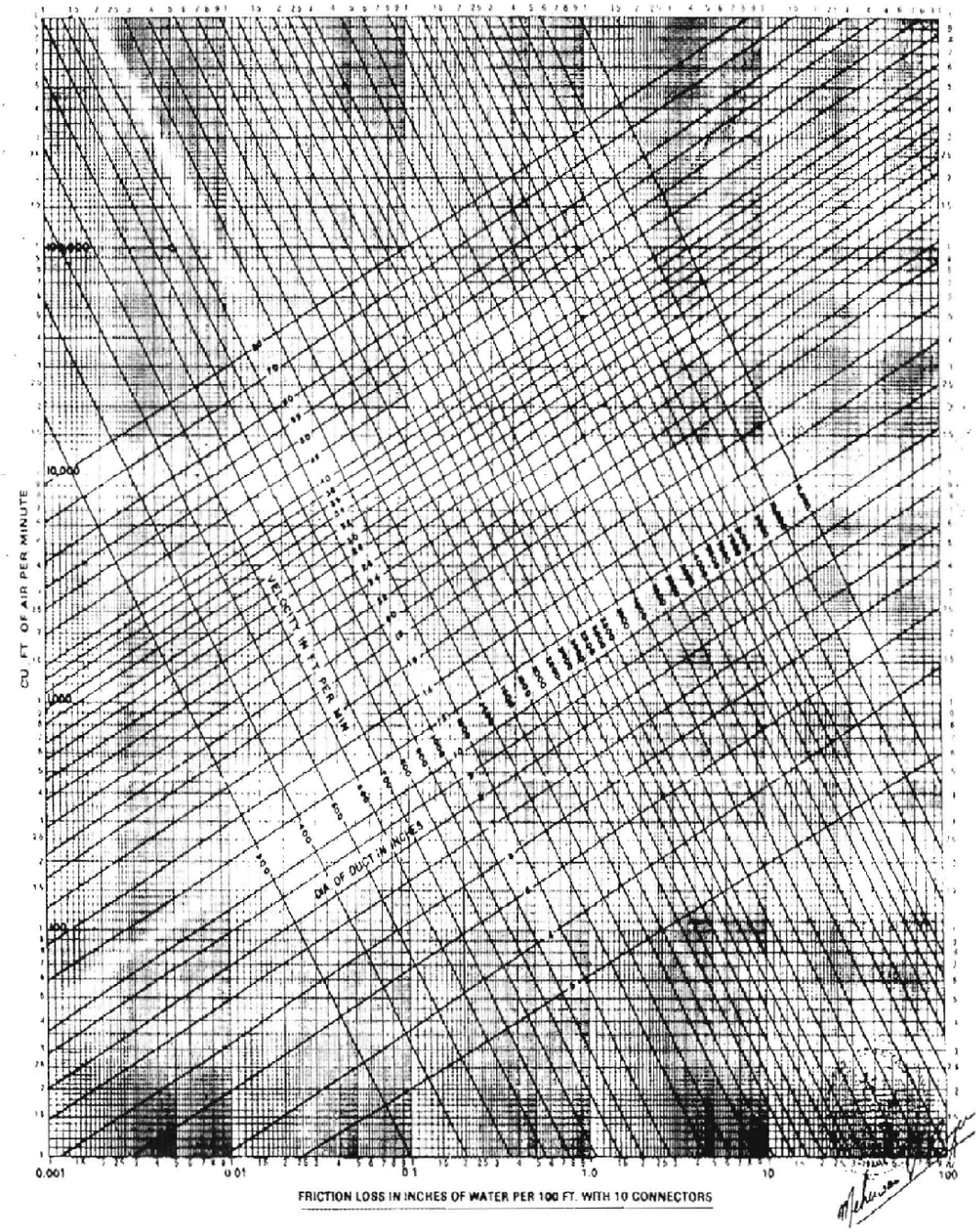

L&L FABRICATION - P.O. BOX 14439 - 5936 EDEN DR - FORT WORTH, TX 76117
(817)834-7146 *Voice* - **(817)834-2971** *Fax* - **spiral@landlfab.com**

BURSTING PRESSURES

This table shows the pressures at which seam failure occurs in Lewis & Lambert spiral duct at various diameters and gauges. The data presented is for spiral duct made from galvanized steel. All tube diameters are in inches and all pressures are in pounds per square inch.

DIAMETER	GUAGES		
	26	**24**	**22**
3"	420	535	650
4"	308	302	475
5"	238	303	369
6"	199	252	308
7"	169	216	262
8"	145	186	224
9"	127	161	196
10"	113	144	177
12"	93	118	145
14"	76	100	120
16"	68	86	103
18"		75	91
20"		66	81
22"		60	72
24"			66
26"			61
28"			55
30"			51
32"			47

STATIC PRESSURE LOSS

L&L Fabrication HVAC Metal Products

45° DIE STAMPED ELBOW

L&L FABRICATION - P.O. BOX 14439 - 5936 EDEN DR - FORT WORTH, TX 76117
(817)834-7146 *Voice* - **(817)834-2971** *Fax* - **spiral@landlfab.com**

STATIC PRESSURE LOSS

L&L Fabrication HVAC Metal Products

90° 5 GORE ELBOW

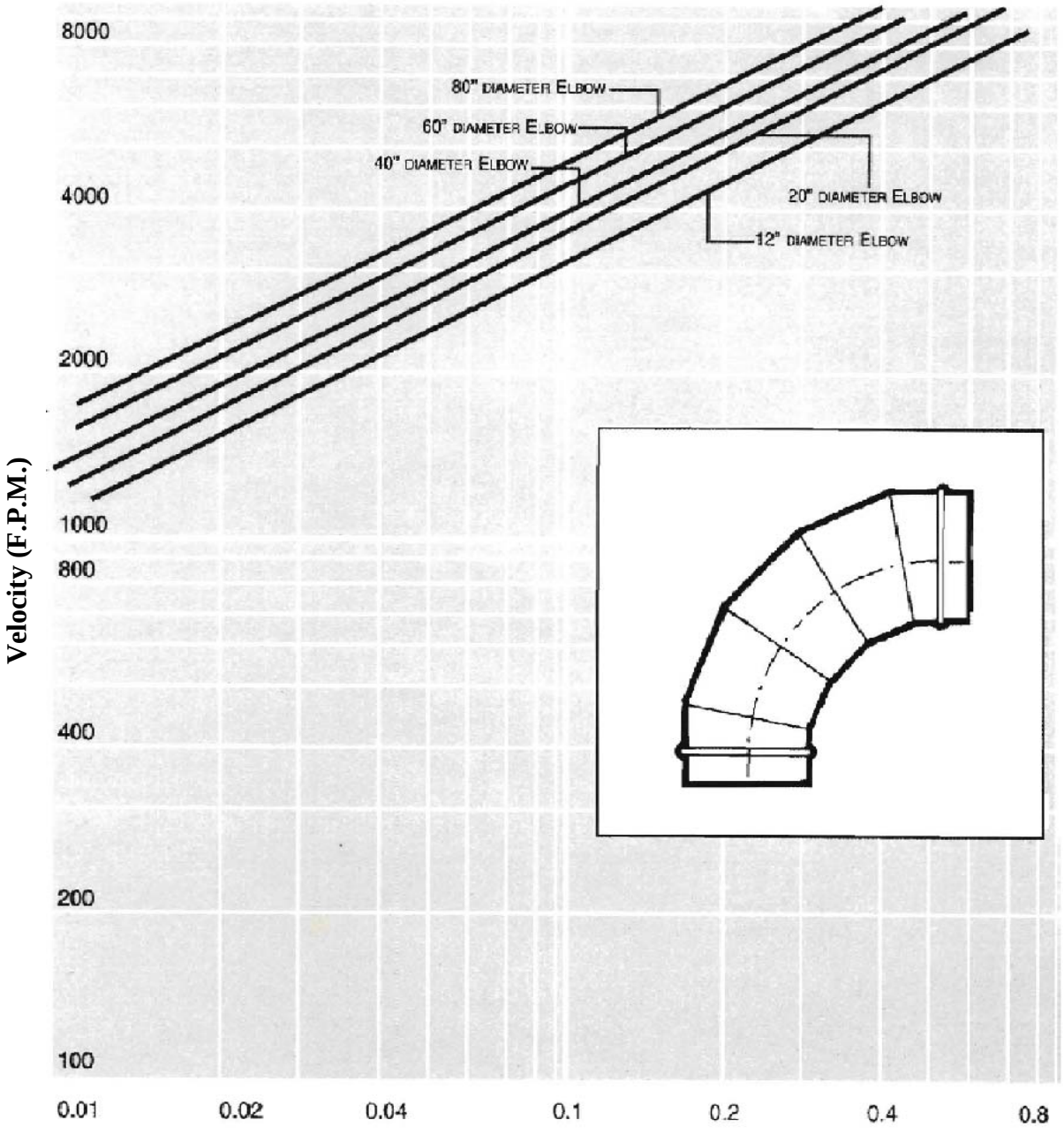

L&L FABRICATION - P.O. BOX 14439 - 5936 EDEN DR - FORT WORTH, TX 76117
(817)834-7146 *Voice* - **(817)834-2971** *Fax* - **spiral@landlfab.com**

STATIC PRESSURE LOSS

90° 5 GORE ELBOW

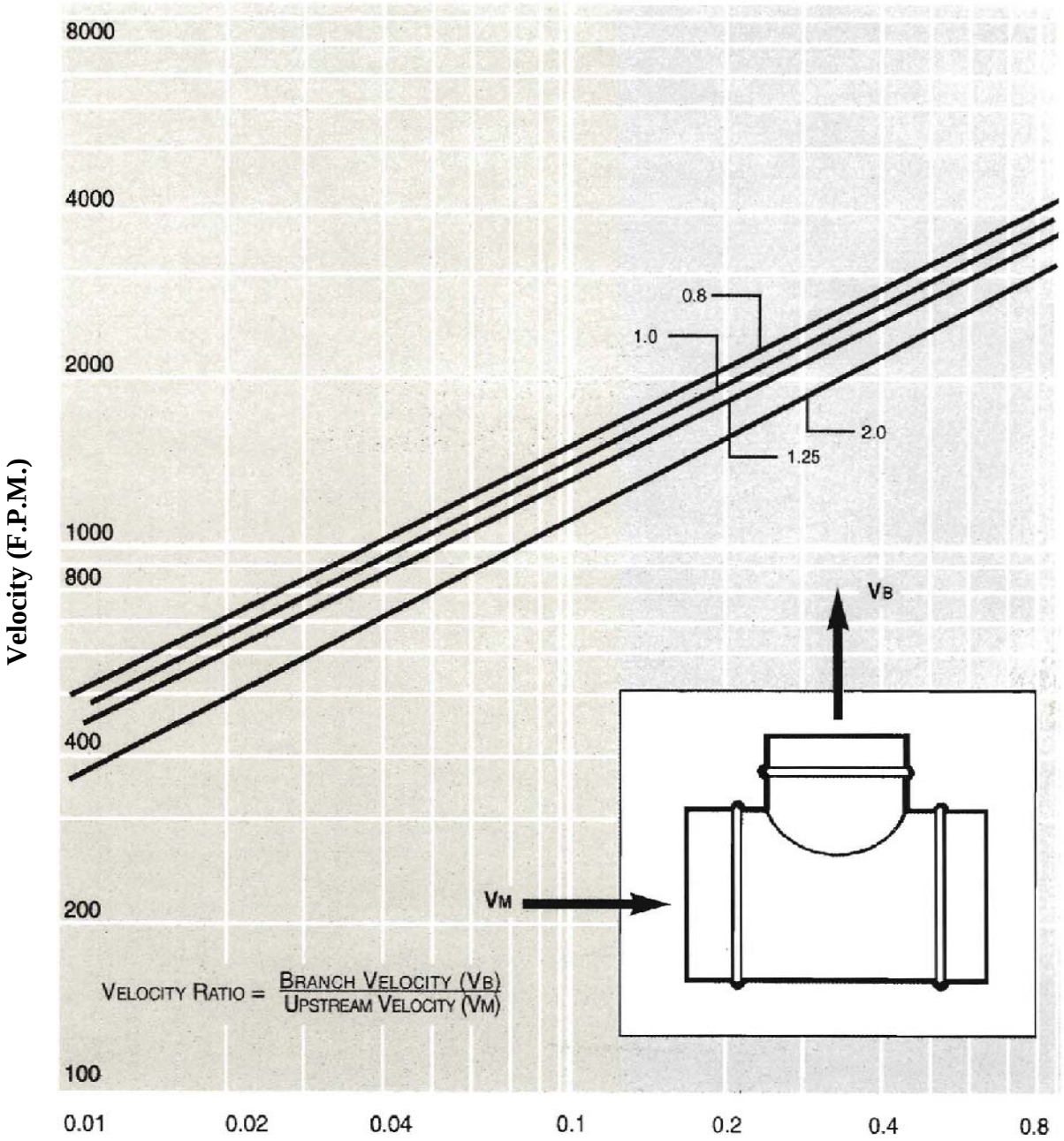

L&L FABRICATION - P.O. BOX 14439 - 5936 EDEN DR - FORT WORTH, TX 76117
(817)834-7146 *Voice* - (817)834-2971 *Fax* - spiral@landlfab.com

Find us on the Web at www.landlfab.com

www.facebook.com/landlfab

3" - 84" Spiral
Long Seam Pipe
Round & Flat Oval
Double Wall Duct
Single Wall Duct
Commercial Projects
Industrial Projects
L&L Water Based Duct Sealer
Angle Rings (Stock & Custom)
Duct Flanges (Can be factory installed)
PVC Coated (Underground Applications)
Laboratory Exhaust Systems Stacks
Custom Options Available

304 & 316 Stainless Steel
Aluminum
Black Iron
G90 Galvanized
G60 Paintgrip
Factory Manifolding
Stock Stamped Elbows 3" - 12"
Stock Gore Elbows 14" - 24"
Duct Accessories
Access Doors
Dust Collection Systems
Grease Duct

CONTACTS:

Plant Operations Manager

Kevin Richison: 817-529-9816

Project Coordinator/AP

Jolyn Watson: 817-529-982

Estimating Department:

Patrick Ayala: 817-529-9789

Stephen Bisacca: 817-529-9791

Outside Sales:

Dan Sargent: 817-529-9816

Ticketing Department:

Henry Ceniceros: 817-529-9796

SMART LOCAL 68 - DFW, TEXAS

SMACNA

5936 Eden Dr • PO Box 14439

Fort Worth, TX 76117 • PH: 817-834-7146 • FAX: 817-834-2971